Features

- Fast response speed and high accuracy by high-speed CPU
- Accurate feedback control (static current, static voltage, static power) by RMS measurement
- Phase control and zero-crossing cycle control (fixed/variable cycle) method for various load control
- Protects inner circuit by built-in rapid fuse
- Remote monitoring and remote control Supports Modbus RTU protocol by RS485 communication
- Built-in customizable 6 digital inputs
- Basic variable alarm outputs; current error, heater part (parts of heater break detection), etc.
- Supports multi input of control input signal (current, voltage, potentionmeter, etc)
- Enables to install control part separately
- Applicable load : all loads such as super kanthal, platinum, molybdenum, carbon, halogen lamp, chrome, nickel, etc.

Please read "Caution for your safety" in operation manual before using this unit.

Ordering information

DPU 1 2 A – 025 R

Option	R	RS485 communication
	D	Remote Display Unit
	A	Remote Display Unit + RS485 communication
	N	No option

Rated current capacity	025	25A	200	200A
	040	40A	250	250A
	050	50A	350	350A
	070	70A	400	400A
	080	80A	500	500A
	100	100A	600	600A
	120	120A	750	750A ※1
	150	150A	950	950A ※1
	180	180A		

Size		1-phase	3-phase
	A	0 to 70A	0 to 50A
	B	80 to 200A	70 to 200A
	C	250 to 350A	
	D	400 to 600A	
	E	Option	

Power supply	1	110V
	2	220V
	3	380V
	4	440V

Number of phases	1	1-phase
	3	3-phase

Item	DPU	Digital Power Controller Unit

※1: For 1-phase models, these are customizable.

■ Size type

◎ 1-phase

(unit: mm) (unit: AWG)

Size	Current capacity	W	H	D	P1	P2	Allowable cable thickness
A	0 to 70 A	97	260	170	82	150	Max. 4
B	80 to 200 A	140	280	174	127	150	Max. 4/0
C	250 to 350 A	213	338	179	193	200	Max. 300MCM
D	400 to 600 A	278	418	212	261	200	Max. 500MCM

◎ 3-phase

(unit: mm) (unit: AWG)

Size	Current capacity	W	H	D	P1	P2	Allowable cable thickness
A	0 to 50A	140	306	200	127	150	Max. 4
B	70 to 200A	213	365	217	195	200	Max. 4/0
C	250 to 350A	278	450	227.5	261	200	Max. 300MCM
D	400 to 600A	427	528	275.5	405	330	Max. 500MCM

Specifications

Series	DPU			
Number of phases	1-phase		3-phase	
Power supply	110VAC / 220VAC / 380VAC / 440VAC (FAN and control power 220VAC 50/60Hz separately)			
Allowable voltage	90 to 110% of rated voltage		85 to 115% of rated voltage	
Rated frequency	50/60Hz (auto recognition), allowable frequency range: ±2Hz			
Min. load current	1A			
Output range	Phase control : 5 to 98%, Z.C. control : 0 to 100%			
Control method※1	• Phase control : Normal control(Non-Feedback), static voltage/static current/static power control(Feedback) • Cycle control(Z.C.): Fixed cycle control, Variable cycle control • ON/OFF control(Z.C.)			
Load	• Phase control : resistance load, inductive load • ON/OFF, Cycle control : resistance load			
Power consumption	Max. 7W (except FAN operation power)		Max. 10W (except FAN operation power)	
Display method	• Display value and SV display : 7 Segment 4 digit • Status display : 4 LED • Display value percentage display : 11 LED Bar		• Display value and SV display : 7 Segment 4 digit • Status display : 6 LED • Display value percentage display : 11 LED Bar	
Output accuracy	• Static voltage feedback control : Within ±3% F.S. of rated voltage(within variable ±10% F.S. of rated voltage) • Static current feedback control : Within ±3% F.S. of rated voltage(within variable 1 to 10 times of rated resistance) • Static power feedback control : Within ±3% F.S. of rated voltage(within variable ±10% F.S. of rated voltage and within variable 1 to 10 times of rated resistance) • Normal control : within ±10% F.S. of rated voltage			
Set method	By front keys, By communication			
Control input	• Auto: 4-20mA / 0-20mA / 0-5VDC / 1-5VDC / 0-10VDC / voltage pulse(0/12VDC) / no-voltage input(ON/OFF) / communication input(RS485) • Manual: inside 10kΩ VR, outside 3 to 10kΩ VR (min. 2W)			
Digital input(DI)	AUTO/MAN switching, RUN/STOP switching, RESET, Output holding, SP setting (SP1 to 6)			
Display content	Control input, load voltage, load current, load power, load resistance, power supply frequency			
Min. display output	Min. 2.5% of rated voltage/current			
Option output	RS485 communication output(Modbus RTU method), [max. 32 units]			
Dielectric strength	2000VAC 50/60Hz for 1 min.(between input terminal and power terminal)			
Vibration	0.75mm amplitude at frequency of 5 to 55Hz (for 1 min.) in each of X, Y, Z directions for 2 hours			
Insulation resistance	Min. 200MΩ(at 500VDC megger)			
Noise resistance	Square shaped noise by noise simulator (pulse width 1μs) ±2kV			
Environ-ment: Ambient temperature	−10 to 50℃, storage : −20 to 80℃			
Environ-ment: Ambient humidity	5 to 90%RH			
Approval	CE			
Unit weight	• A Size : 3.0kg • B Size : 5.5kg	• C Size : 11.0kg • D Size : 17.5kg	• A Size : 6.5kg • B Size : 11.5kg	• C Size: 20.0 kg • D Size: 35.5 kg

※ 1. Variable cycle control is only for 1-phase model.

※ Environment resistance is rated at no freezing or condensation.

Connections

■ 1-phase

● A Size

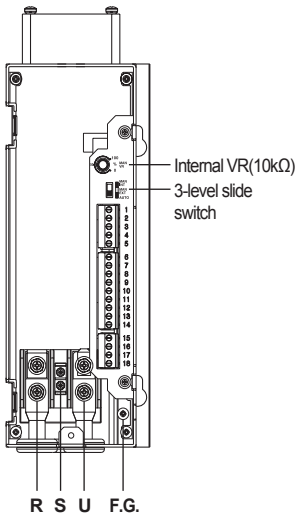

● B Size

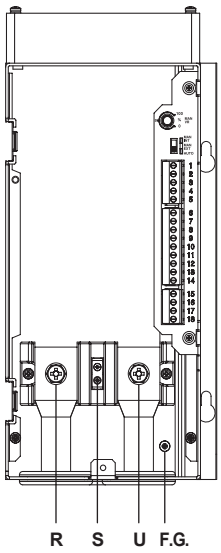

● C Size

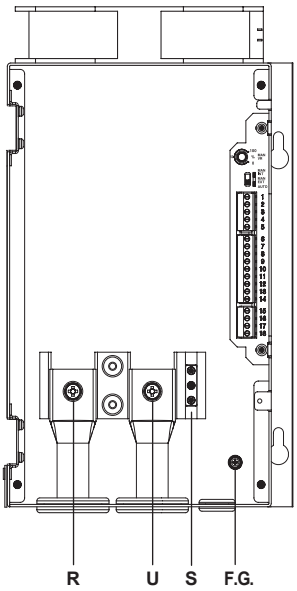

● D Size

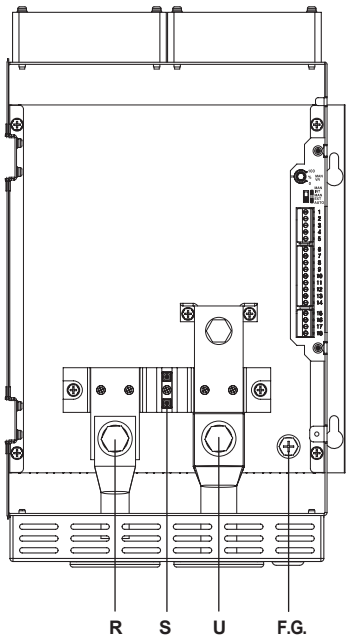

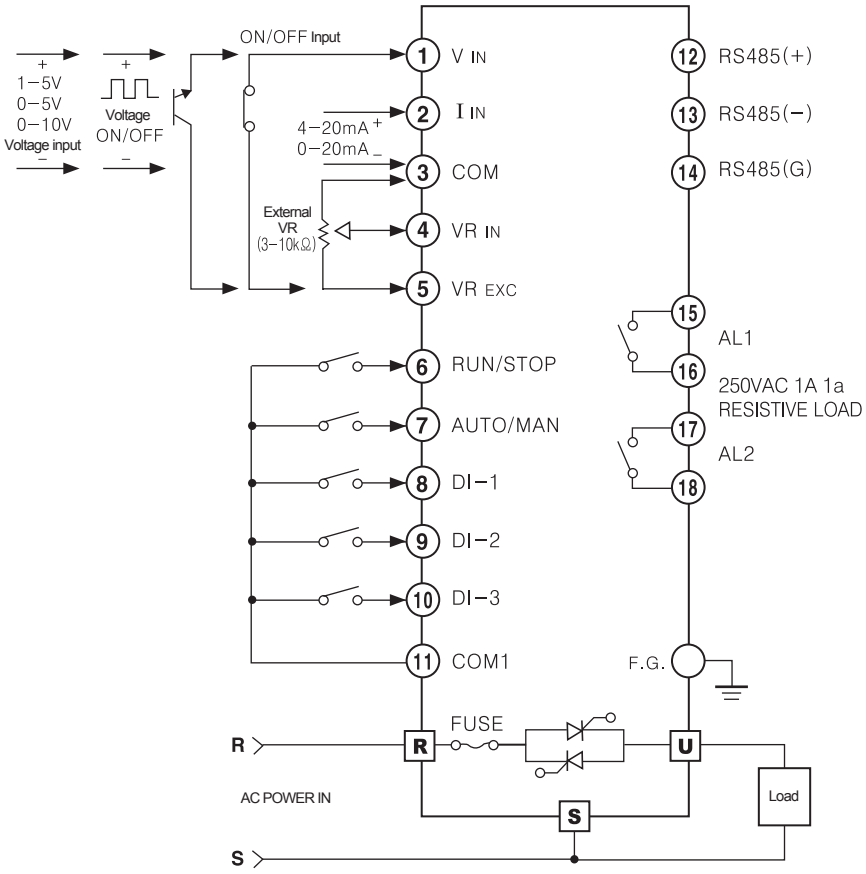

- Do not mix noise to input cable.
  It is recommended to use shield cable, twisted cable as input cable for effective noise.
- If there is possible to affect inductive noise, it is recommended to use shielded cable at high-frequency power for effective noise.
- DI input switch should be for low current and ON resistance should be max. 20Ω (including cable resistance).
- DI input terminals are COM, DI-1 to 3, RUN, AUTO.
- For remote display unit option model, use connection cable as our standard cable.
- When connecting ⑥, ⑪ , it operates as MANUAL. When connecting, ⑥, ⑦, ⑪, it operates AUTO.

■ 3-phase

● A Size

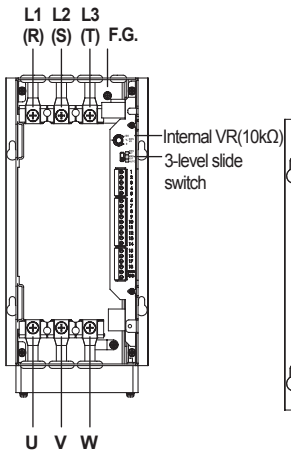

● B Size

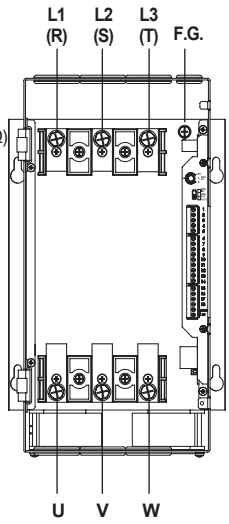

● C Size

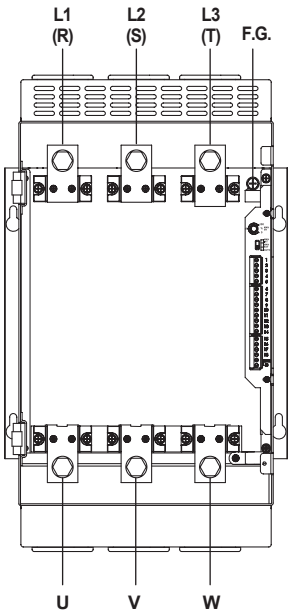

● D Size

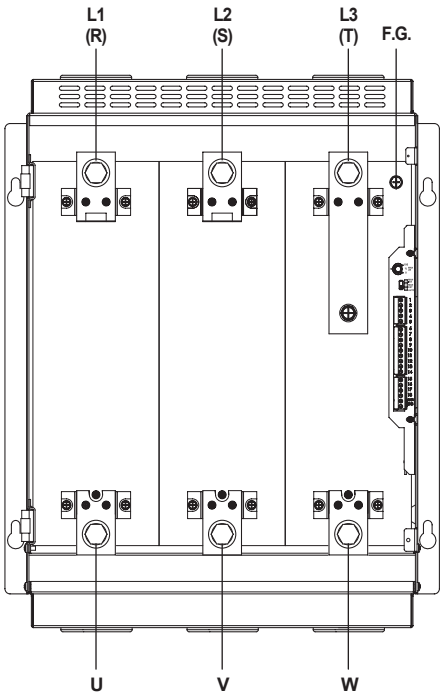

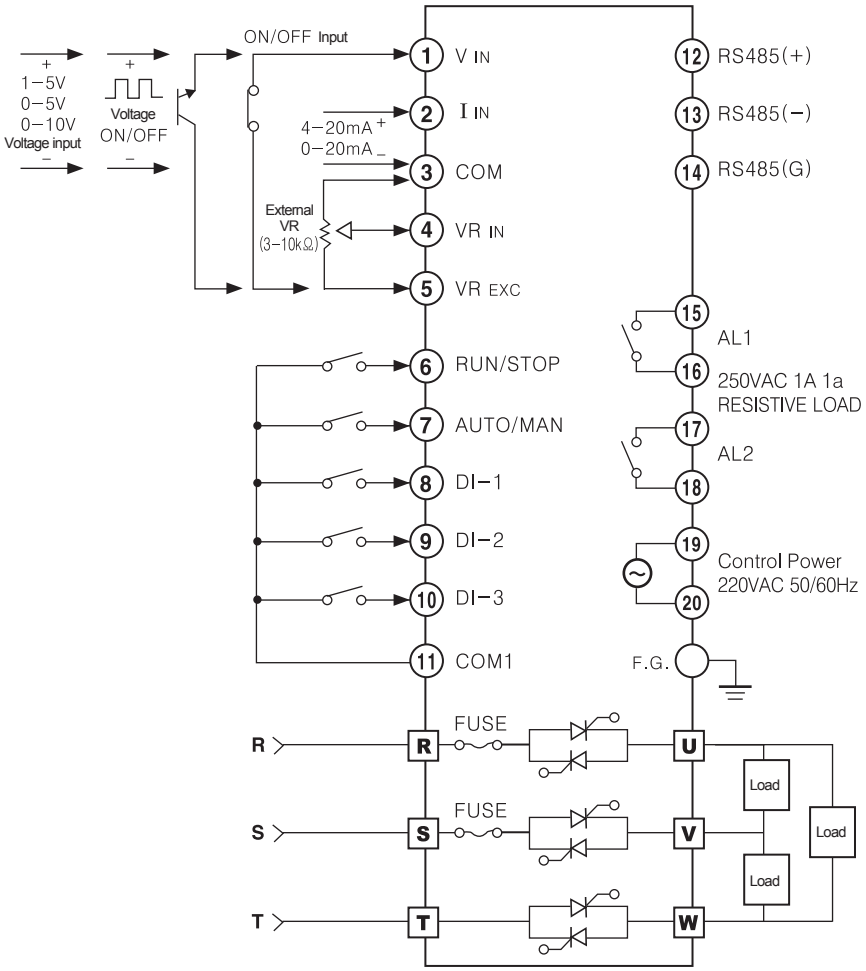

- Do not mix noise to input cable.
  It is recommended to use shield cable, twisted cable as input cable for effective noise.
- If there is possible to affect inductive noise, it is recommended to use shielded cable at high-frequency power for effective noise.
- DI input switch should be for low current and ON resistance should be max. 20Ω (including cable resistance).
- DI input terminals are COM, DI-1 to 3, RUN, AUTO.
- For remote display unit option model, use connection cable as our standard cable.
- When connecting ⑥, ⑪ , it operates as MANUAL. When connecting, ⑥, ⑦, ⑪, it operates AUTO.

Dimensions

(unit:mm)

■ 1-phase

● **A Size : DPU1□A-25 / 40 / 50 / 70**

※25A, 40A, 50A are not attached a fan.

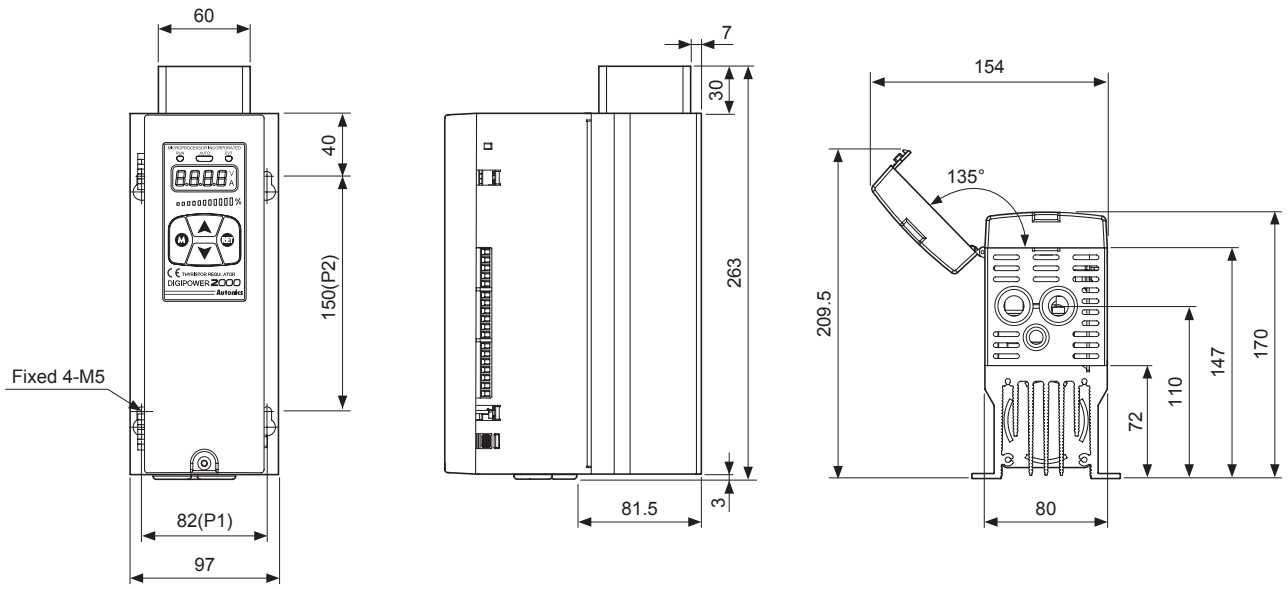

● **B Size : DPU1□B - 80 / 100 / 120 / 150 / 180 / 200**

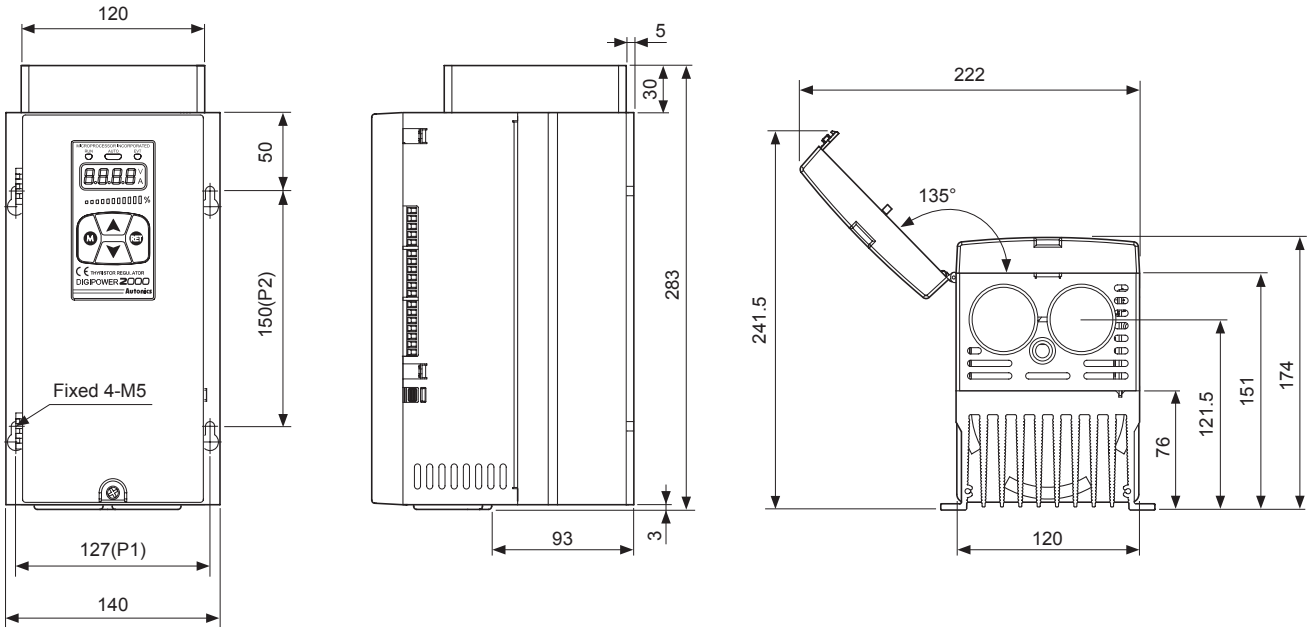

● **C Size : DPU1□C - 250 / 350**

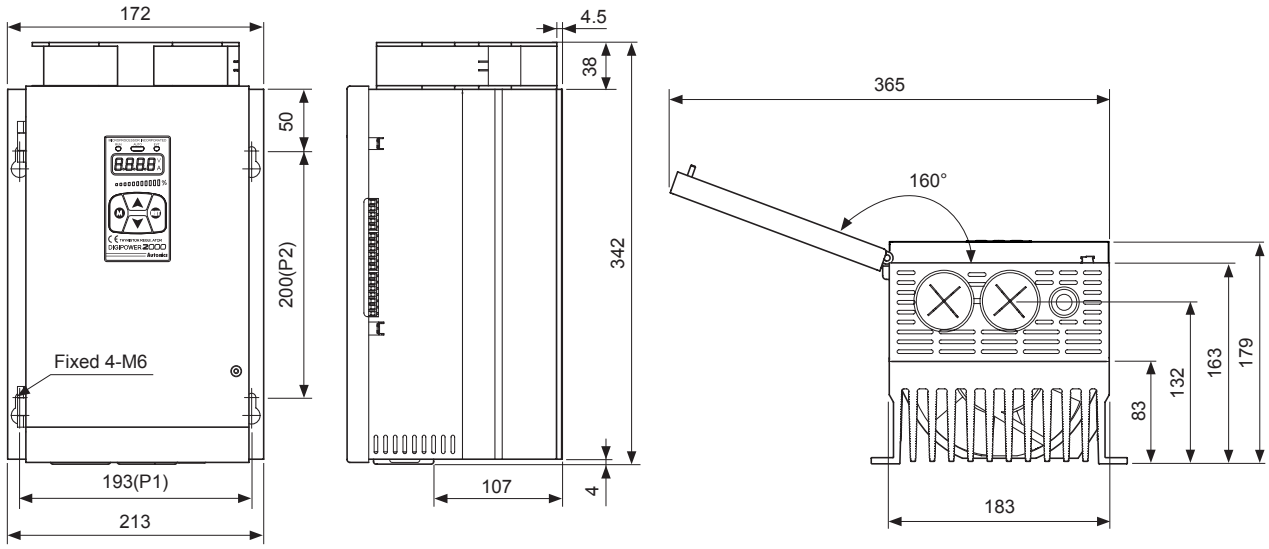

● **D Size : DPU1□D - 400 / 500 / 600**

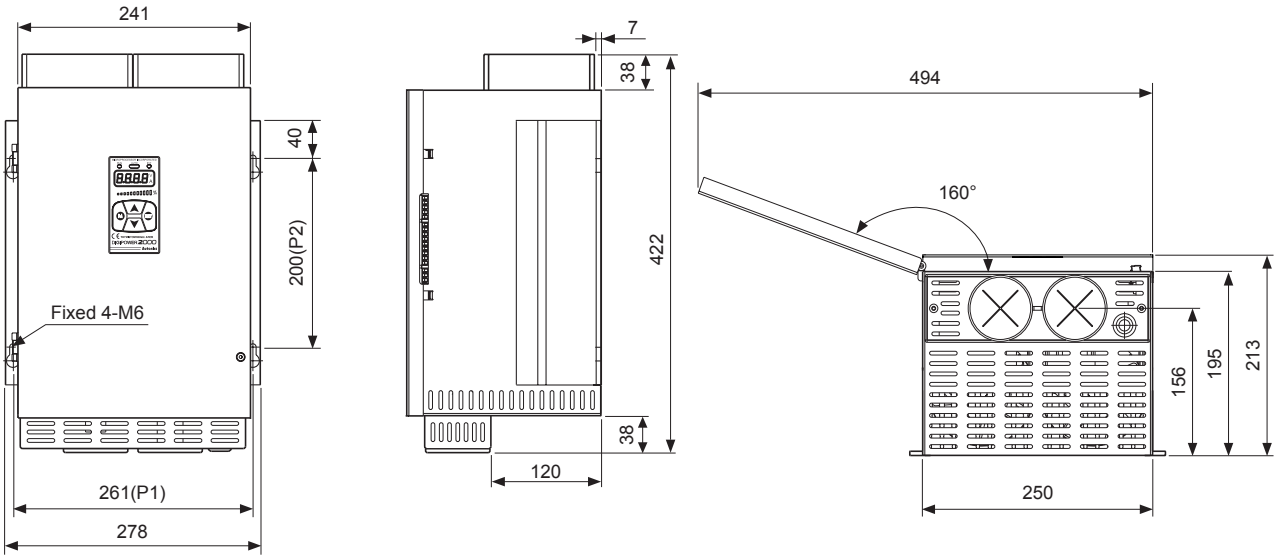

◎ **In case of remote display unit + RS485 communication option,**

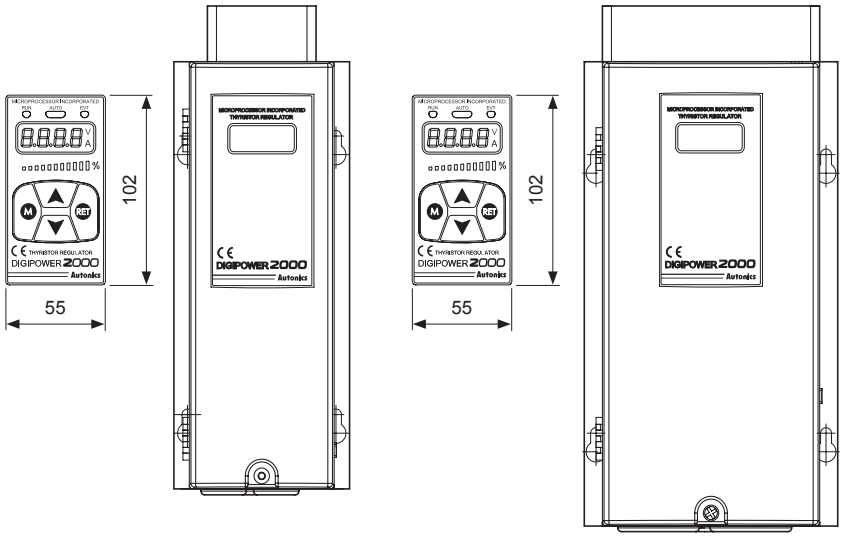

● **Panel cut-out**

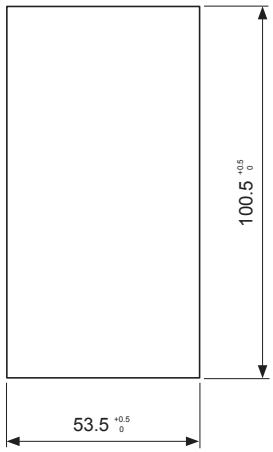

※ It is recommended for remote panel cable to use max. 5 m to prevent noise. (Check the length when ordering it.)

■ 3-phase

● **A Size : DPU3□A - 25 / 40 / 50**

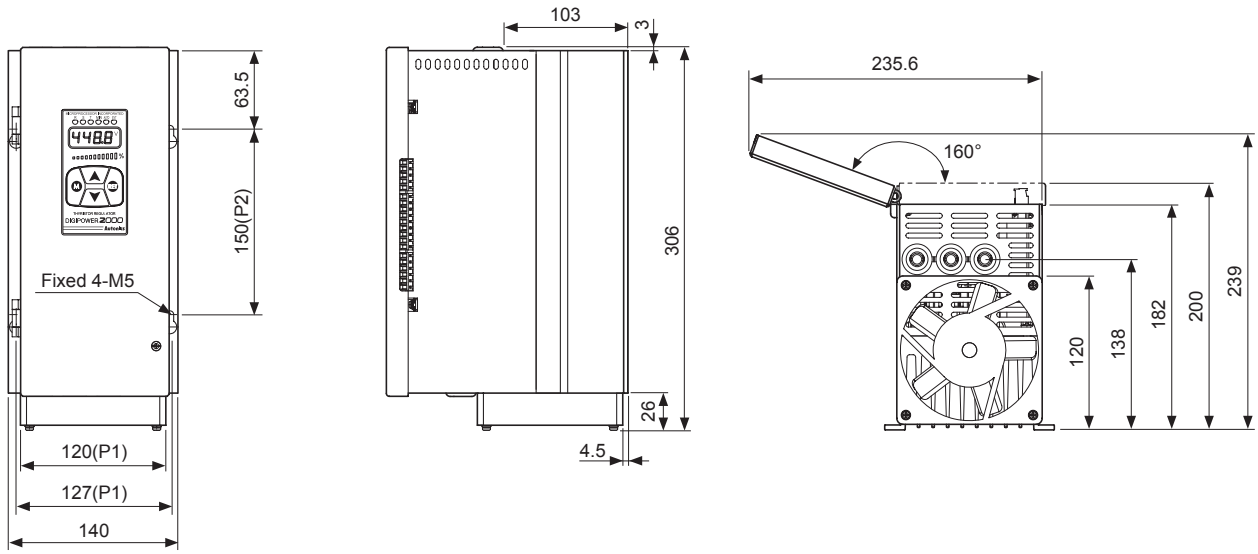

● **B Size : DPU3□B - 70 / 80 / 100 / 120 / 150 / 180 / 200**

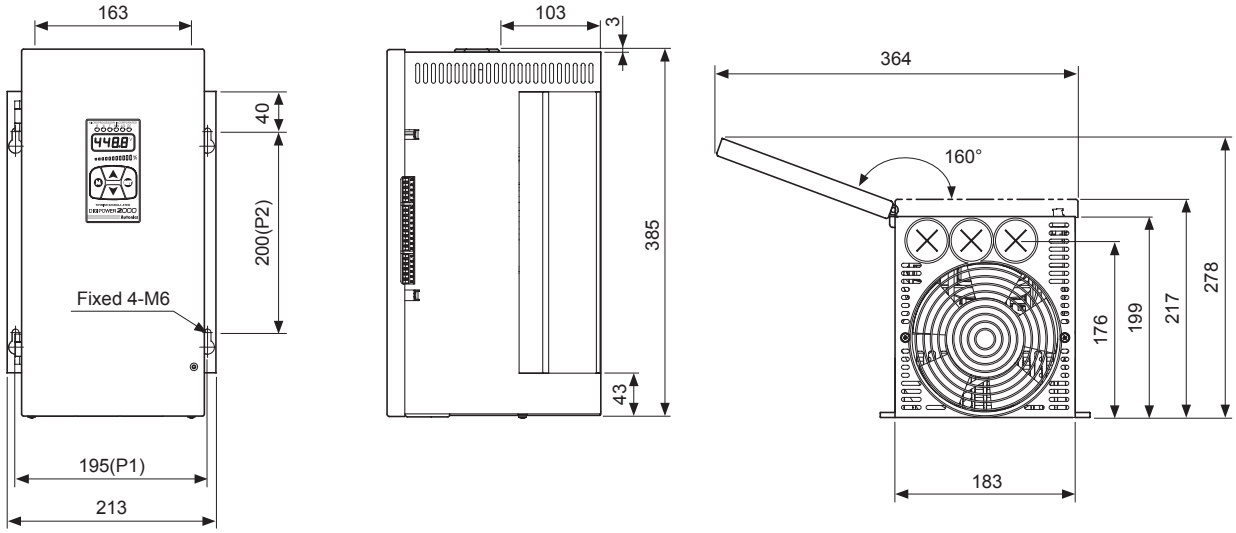

◎ In case of remote display unit + RS485 communication option,

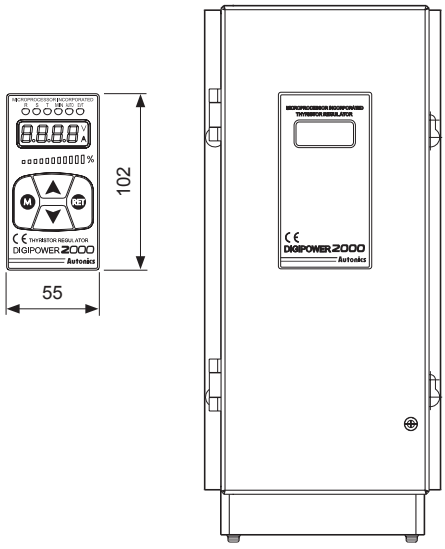

● **Panel cut-out**

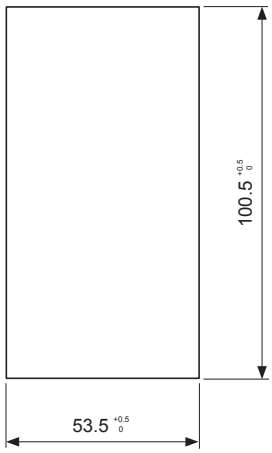

※ It is recommended for remote panel cable to use max. 5 m to prevent noise. (Check the length when ordering it.)

● **C Size : DPU3□C - 250 / 350**

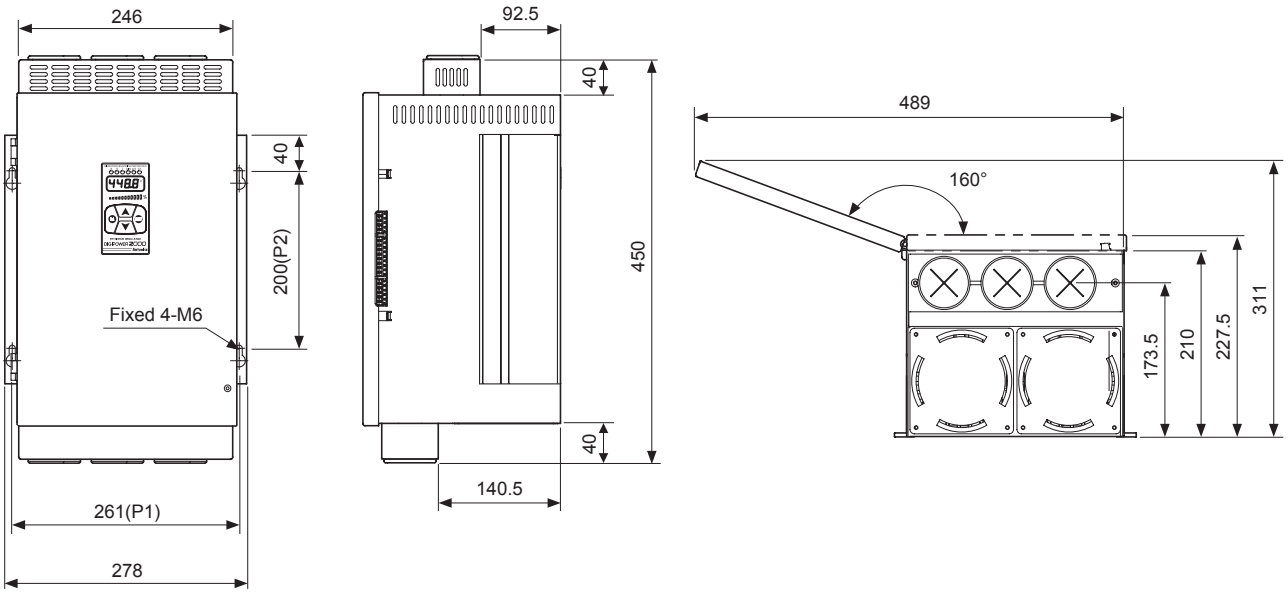

● **D Size : DPU3□D - 400 / 500 / 600**

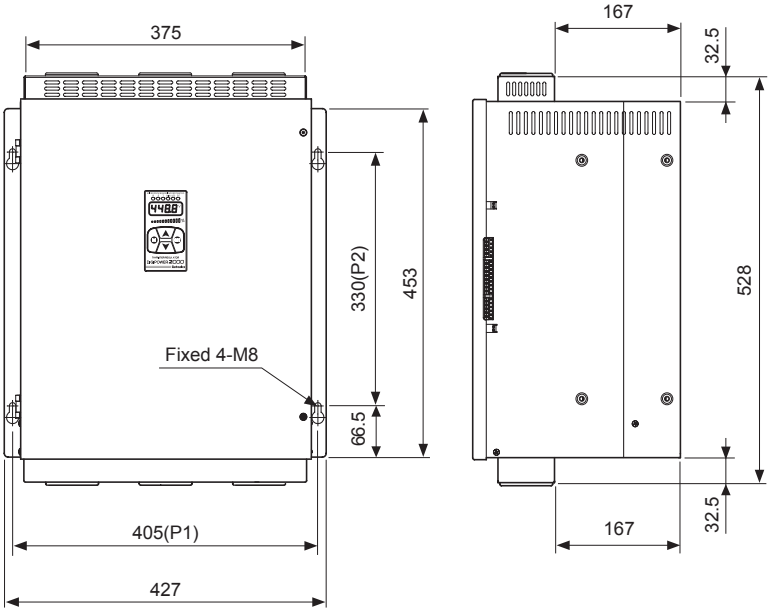

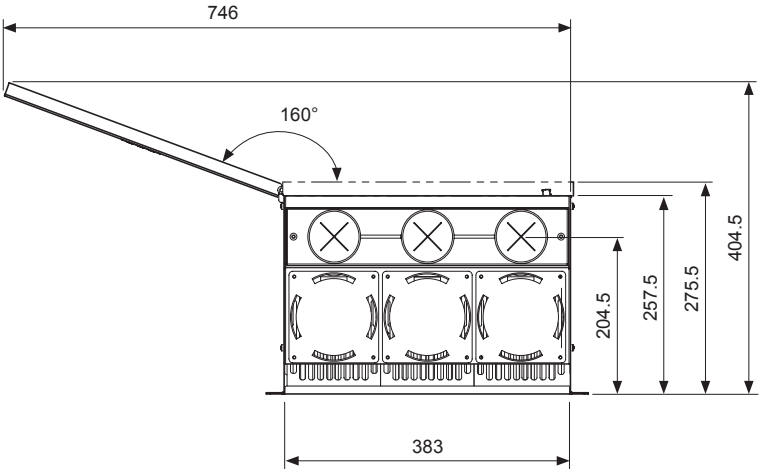

Part descriptions

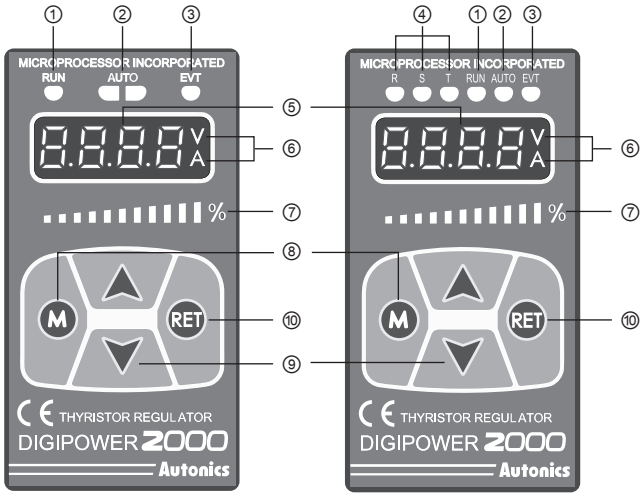

<1-phase> <3-phase>

① RUN indicator: Turns ON in RUN, turns OFF in STOP

② AUTO indicator: Turns ON in AUTO, turns OFF in MANUAL

③ EVT indicator
: Turns ON in Digital Input (DI-1 to 3) ON, flashes in alarm output

④ R, S, T indicators
: Turns ON differently by displayed value in display part
Ex) When R, S turn ON, it displays voltage between R-S line

⑤ Display part
: Displays selected display value content in RUN mode, displays parameter and set value in SET mode

⑥ V, A indicators
: The V indicator turns ON when displaying voltage,
The A indicator turns ON when displaying current,
The V, A indicators turn ON when displaying power,
The V, A indicators turn OFF when displays resistance and input value

⑦ Bar display
: Turns ON as 0 to 100% ratio for selected display value

⑧ M key
: Used to enter parameter mode, monitoring mode and to move between parameters

⑨ ▲,▼ key: Used to move setting modes and to set parameters.

⑩ RET key: Used to return to RUN mode from SET mode

Control input

■ Input type

Type					Parameter
AUTO input	Analog input	Current	4-20mA	Input impedance 100Ω	4-20
			0-20mA		0-20
		Voltage	1-5VDC	Input impedance 25Ω	1-5
			0-5VDC		0-5
			0-10VDC		0-10
	ON/OFF input	Voltage pulse	0/12VDC		SSr
		No-voltage pulse	ON/OFF	-	
	Com. input	RS485	-	-	Com
MANUAL input		Internal VR	10kΩ	-	-
		External VR	3 to 10kΩ	-	-

■ RMS display

This unit measures and displays RMS for accuracy.

※Ex) At pure resistance load, in normal control, when input is 4-20mA and rating is 220V,

Input	4mA	8mA	12mA	16mA	20mA
MV	0%	25%	50%	75%	100%
Display voltage	0.0V	70V	155.5V	209.7V	220.0V

In case of static voltage or static current, voltage and current displays as below.

※Ex) At pure resistance load, in feedback control, when input is 4-20mA and rating is 220V or 50A,

Input	4mA	8mA	12mA	16mA	20mA
MV	0%	25%	50%	75%	100%
Display voltage (static voltage control)	0.0	55.0	110.0	165.0	220.0
Display voltage (static current control)	0.0	12.5	25.0	37.5	50.0

■ Input selection

In AUTO input, select it at control input type[In-P] at setting mode1.

In MANUAL input, set output slope manual adjustment [A-GA] in operating mode as OFF and select the input by the inside 3-level slide switch.

◎ **Output slope manual adjustment [A-GA] as oFF**
: Select the input by the inside 3-level slide switch

Type	Description
MAN INT	Adjust output slope with the inside VR
MAN EXT	Adjust output slope with an outside VR
AUTO	No function

■ AUTO/MANUAL selection by terminal input(DI) [terminal 7 and 11]

When the AUTO/MAN terminal input is ON(close), it is AUTO input operation. When it is OFF(open), it is MAN(manual) input operation.

When the AUTO/MAN terminal input is OFF(open) (MANUAL operation), only INT or EXT input selected by the 3-level slide switch is available.

Functions

■ Soft Start [St-t]

When controlling the load which has inrush current (platinum, molybdenum, tungsten, infrared lamp, etc) in power ON, or when control input changes rapidly, it prevents the load to increase output gradually within the set time. Set the time for soft start.

Regardless of control method setting (phase control or cycle control), it operates as phase control.

Set the time to reach output from 0 to 100%.

It operates when it is RUN mode from STOP status after supplying power or reset. When it reaches to the target output value, soft start function ends.

Soft start set time (t) is the time up to 100% increase of output applied to load. When the final target output value is 50%, taken time to reach is t/2.

Reaching time to the final target output value = Target output (%)× t

※ Ex) SOFT START sec., final target output : 80%

0.8×25 = 20sec

- Set range : 0 to 100 sec. (0 sec.: not using this function)

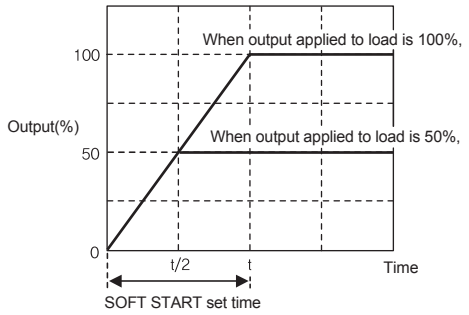

■ Start limit [S-Ln] and start limit time [S-Lt]

When power is ON, changing to RUN status from STOP status, or alarm reset, set limit output value and time to prevent the inrush current or error current.

Regardless of control method setting (phase control or cycle control), it operates as phase control.

- Set range for start limit: 0 to 110% of output
- Set range for start limit time : 0 to 100 sec. (0 sec.: not using this function)

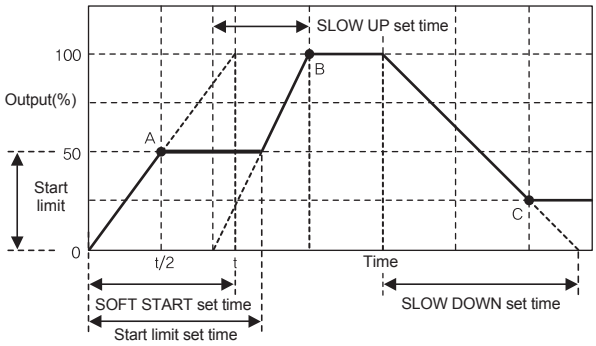

- A : SOFT START function ends
- B : SLOW UP function ends
- C : SLOW DOWN function ends

■ Output slope setting [SLoP]

This function is to set output changed ratio by control input from 0.00 to 1.00 range.

- Output value when setting slope : Input(%)×Slope value

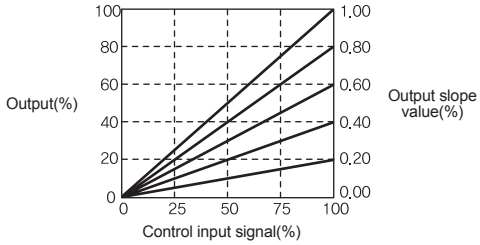

■ Output slope manual adjustment [A-GA]

This function is to adjust manually (inside or outside VR) output value ratio for control input.

When AUTO operation and output slope manual adjustment[A-GA] is set as ON, [SLoP] is not able to set.

It displays slope value by the inside or outside VR input.

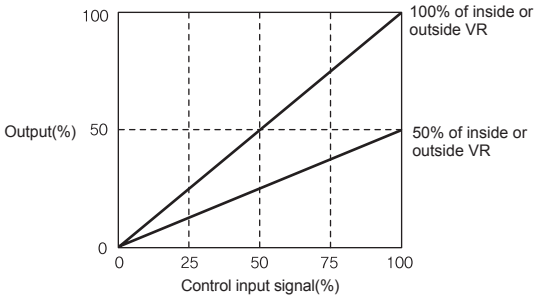

◎ Output slope manual adjustment [A-GA] as on
: Set output slope by the inside 3-level slide switch

Type	Description
MAN INT	Adjust output slope with the inside VR
MAN EXT	Adjust output slope with an outside VR
AUTO	No function

■ BASE-UP [b-UP]

This function is to add base-up set value to input signal. It is available only when output low-limit value is 0%.

It is limited by start limit value at initial start.

- Set range : BASE-UP SV(%) < Output high-limit value
- Output value for BASE-UP setting
  : Input(%)×Slope value+ BASE-UP SV

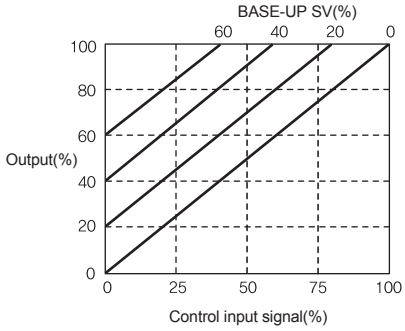

■ SLOW UP / SLOW DOWN [UP-t / dn-t]

It is same purpose as soft start function. Soft start starts only one time at first but slow up/slow down function start during operation.

Regardless of control method setting (phase control or cycle control), it operates as phase control.

When it reaches to the target output value, slow up/slow down functions end.

- Set range : 0 to 999 sec. (0 sec.: not using this function)

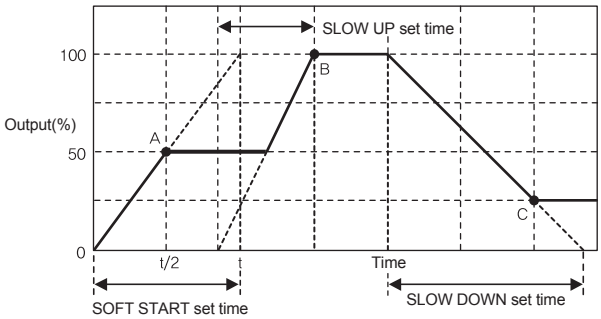

- A : SOFT START function ends
- B : SLOW UP function ends
- C : SLOW DOWN function ends

■ Output high limit value [H-oL], Output low limit value [L-oL]

This function is to limit output range to protect load.

- Set range : 0 to 110%
  (Output low limit value < Output high limit value)

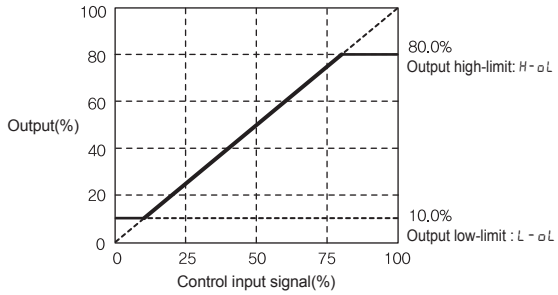

■ Current limit [C-Lm]

It operates when normal, static voltage, static current mode of phase control.

When using the load which has high inrush current, it restrains the current to protect thyristor.

Especially, in case of voltage feedback, only voltage current, it may over the rated current of thyristor because current flows by resistance value of the load. To prevent over the rated current, limit the current.

- Set range : 0 to 110% of rated current

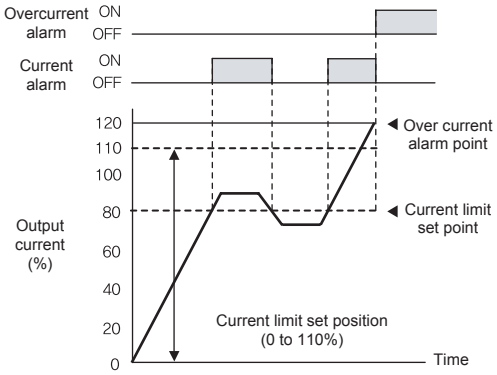

■ Digital input(DI)

Below functions are available by terminal input.

Digital input has five terminals; AUTO/MANUAL terminal, RUN/STOP terminal, and DI-1 to 3 terminals.

Select the function for each input terminal of DI-1 to 3.

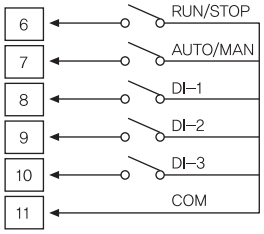

◎ AUTO/MANUAL selection [terminal 7 and 11]

Select AUTO(close)/MANUAL(open) input by terminal input.

AUTO mode controls output according to control input as analog input (voltage, current) or ON/OFF input (including SSR pulse input).

MANUAL mode controls according to control input as the inside VR adjustment or an outside VR adjustment.

When selecting AUTO (close), the front AUTO indicator turns ON or selecting MANUAL(open), the front AUTO indicator turns OFF.

◎ RUN/STOP switching [terminal 6 and 11]

Select RUN(close)/STOP(open) operation status by terminal input.

RUN mode operates as the set contents by control input. STOP mode is standby status.

When selecting RUN(close), the front RUN indicator turns ON or selecting STOP(open), the front RUN indicator turns OFF.

◎ Digital input(DI-1 to DI-3) setting [terminal 8, 9, 10 and 11(COM)]

Select the each function for each digital input at parameters [di-1, di-2, di-3].

When setting ON(close) to DI input, the front EVT indicator turns ON or setting OFF(open), the front EVT indicator turns OFF.

As below, there are 6 functions to select.

※ SP-m is available only in di-1.

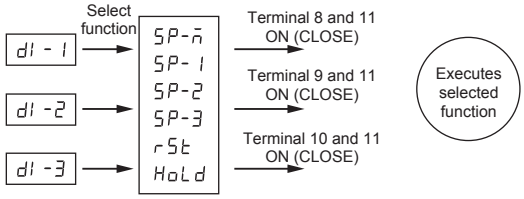

● **RESET [rSt]**

After selecting RESET function, turn digital input ON(close) and open, this unit resets and re-starts.

● **HOLD [HoLd]**

After selecting HOLD function and digital input is ON(close), output and display value of this unit is hold. (it operates hold when digital input maintains ON(close) status.)

● **Single SP [SP-1, SP-2, SP-3]**

Set [SP-1, SP-2, SP-3] to each digital input for output to reach to the relevant SP.

It is available to set individually at [di-1, di-2, di-3], and duplicated setting is allowed.

When setting SP-1,, SP1 is displayed in operating mode, same as SP-2 and SP-3.

When this function is not set, the parameters to set SP in operating mode are not displayed.

※Ex)

di-1	di-2	di-3	Operating Mode SP value set parameter
SP-1	SP-2	SP-3	SP-1(ex: 20%)
			SP-2(ex: 40%)
			SP-3(ex: 60%)

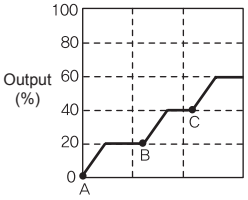

• A : When di-1 is ON
• B : When di-2 is ON
• C : When di-3 is ON

● **Multi SP [SP-n]**

It is available to set total 6 SPs and to control output depending on 3 digital inputs' setting.

This function is selectable only in [di-1]. When selecting [SP-n] at [di-1], [di-2, di-3] parameters are not displayed.

When selecting [SP-n] at [di-1], 6 parameters to set SPs are displayed in operating mode.

(SP-1, SP-2, SP-3, SP-4, SP-5, SP-6)

※Ex)

	di-1	di-2	di-3	Operating Mode SP value set parameter
A	○	×	×	SP-1 (ex: 20%)
B	×	○	×	SP-2 (ex: 40%)
C	○	○	×	SP-3 (ex: 60%)
D	×	×	○	SP-4 (ex: 80%)
E	○	×	○	SP-5 (ex: 100%)
F	×	○	○	SP-6 (ex: 0%)
G	○	○	○	—

※ ○: Close, ×: Open

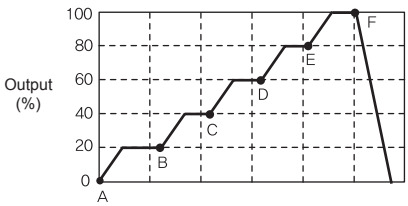

※ A, B, C, D, E, F
: Close/Open status of Digital Input

■ **Proportional and integral constant set of feedback control**

Proportional Integral Control:

This is the combination of proportional control and integral control. Proportional control operates soft control without overshoot and hunting for the set value. Integral control modifies offset automatically to reach the set value stably.

The optimal values of proportional constant and integral constant are set as factory defaults. When changing proportional constant and integral constant, it may cause response delay in feedback control or overshoot or hunting.

◎ **Proportional constant set [P]**

It compensates error from the target value proportionally.

If proportional constant value is small, response is fast and it may cause overshoot or hunting. If proportional constant value is big, response is slow.

• Set range : 0(0%) to 2000(100%)

◎ **Integral constant set [I]**

It compensates cumulative error from the target value.

The set integral constant is the time when proportional value and integral value are equal.

If integral constant value is small, response is fast and it may cause overshoot or hunting. If integral constant value is big, response is slow.

• Set range : 0.1 to 999.9 sec.

※P, I parameters are displayed when control mode is static voltage, static current, static power mode in phase control.

■ **Input correction [In-b]**

It compensates the offset between actual input value and measured input value.

• Set range : -99.9 to 99.9%

※Ex) Input type is 4-20mA,

When 4mA is applied and the input monitor value displays, set [In-b] as -0.5 and the input monitor value displays as 0.0%.

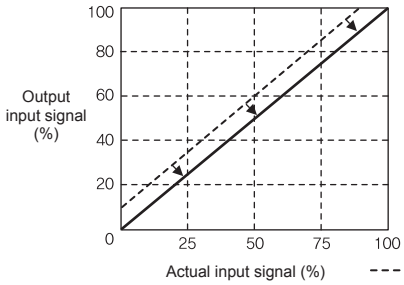

--- Actual input signal(%)
— Input corrected signal(%)

■ Input slope correction [SPAn]

It compensates the gain of the measured 100% input for actual 100% input value.

- Set range : -99.9 to 99.9%

※Ex) Input type is 4-20mA,

When 20mA is applied and the input monitor value displays 99.5%, set [SPAn] as 0.5 and the input monitor value is 100.0%.

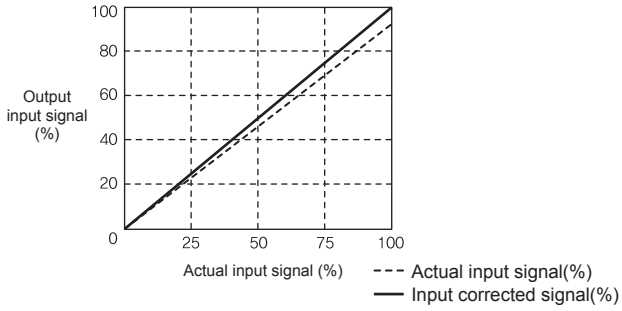

■ Display value content selection [d ISP]

You can select display value content for the display part in RUN mode.

- Selectable display value content :
  load voltage [U-u, u-y, y-U], load current [LA-U, LA-u, LA-y], power [PY], control input [rEF]

■ Load resistance display method [drES]

This function is for display load resistance [rES] into a percentage in monitoring mode when disconnecting the parallel load. You can select this value as increase rate of load resistance [UP] or as decrease rate of number of loads [doYn].

※Decrease rate of number of loads [doYn] displays correct decrease rate only when the connected each load resistance is same.

Ex)Each of R_1 to R_{10} is 10Ω and load resistance (R) is 1Ω, When disconnecting R_1 to R_5,

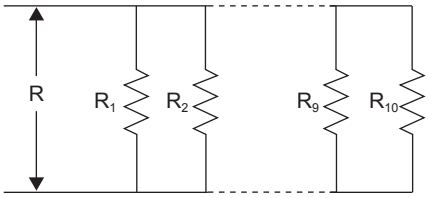

① Increase rate of load resistance[UP]

It is based on 100% of load resistance (R), 1Ω. When disconnected R_1 to R_5, load resistance is 2 Ω and load resistance [rES] in monitoring mode displays 200%.

② Decrease rate of number of loads [doYn]

It is based on 100% of 10 loads(R_1 to R_{10}). When disconnected R_1 to R_5, the number of load are 5(R_6 to R_{10}) and load resistance [rES] in monitoring mode displays 50%.

■ Bar Graph display value content selection [bAr]

You can select display value content for the bar graph.

- Selectable display value content :
  load voltage [U-u, u-y, y-U], load current [LA-U, LA-u, LA-y], power [PY], control input [rEF]

■ Heater break alarm [H-bY]

The principle of heater break alarm is load recognition function. It measures load resistance and when load resistance value is higher than the break alarm SV, this alarm operate regardless of output.

■ Full load auto recognition [F-Ld]

When operating load recognition function, it outputs 100% for 3 sec. Do not use this unit to the device which has problem 100% output of load.

Set [F-Ld] as on in setting mode 1 [St-1] group and press the M key, load auto recognition function operates. According to secular changes of the load, execute this function regularly.

※Be sure that when auto recognition starts, it operates 100% output for 3 sec.

※Caution

Do not execute this function as on without profession's consultations. When executing this function, voltage, current outputs fully. Be sure that it may cause damage to the load.

When using special load using low voltage and high current such as (super)tantalum, SiC, molybdenum, tungsten, etc, it may cause heater break alarm [H-bY]. This alarm does not have problem in operation but it occurs when it does not detect the load when using as low voltage. Set the below notes to clear the alarm.

Note>When using special load such as (super) tantalum, SiC, molybdenum, tungsten, H-bY alarm clear method:

·Set load resistance display method [drES] as UP in setting mode 1 [St-1].

·Set heater break alarm value [Hb-u] as 500 in setting mode 2 [St-2].

■ Alarm

Alarm	Parameter	Operation	Clear alarm
Overcurrent alarm	o-C	※1	·Re-supply the power. ·RESET(RET key) ·Switch to STOP mode
Overvoltage alarm	o-u		
Fuse break alarm	FUSE		
Heatsink overheat alarm	tEnP		
Element error alarm	SCr		
Heater break alarm	HbY	Continues operation	Automatically cleared within the set range

※1: For 1-phase model, output stops.
For 3-phase model, when 1-phase break, it maintains output and when 2-phase break, it stops output.

■ Lock [LoCY]

This function is to limit parameter set value check and change.

Set this parameter lock function to enter setting mode1. When setting this parameter lock as LoC2 or LoC3, only parameter lock is displayed in setting mode 1.

Parameter	oFF	LoC1	LoC2	LoC3
Operating Mode set group	●	●	●	◐
Setting Mode 2 set group	●	●	◐	◐
Setting Mode 1 set group	●	◐	○	○

●:Enable to check and set, ◐:Enable to check/Disable to set,
○: Disable to check

Monitoring mode

Monitoring mode can monitor measured several physical quantities of this unit, not set parameters.

■ 1-phase

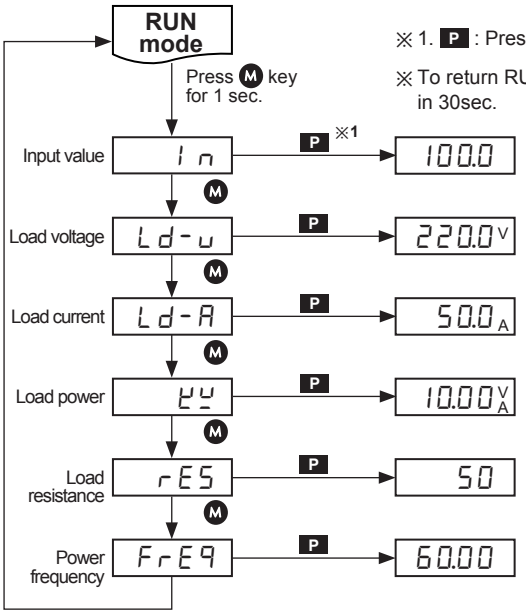

※1. P : Press any key among ▲, ▼.

※To return RUN mode, press the RET key at any parameter, or not to operate any keys in 30sec.

For ON/OFF input, or SSR pulse input, it displays 0 or 100.
• Set range : Within 0.0 to 100.0%

Monitors measured voltage at load within the rated voltage range.

Monitors measured current at load within the rated current range.

Monitors measured power at load within the rated power range.

Displays measured resistance at load for initial set resistance as percentage

Displays frequency of power

■ 3-phase

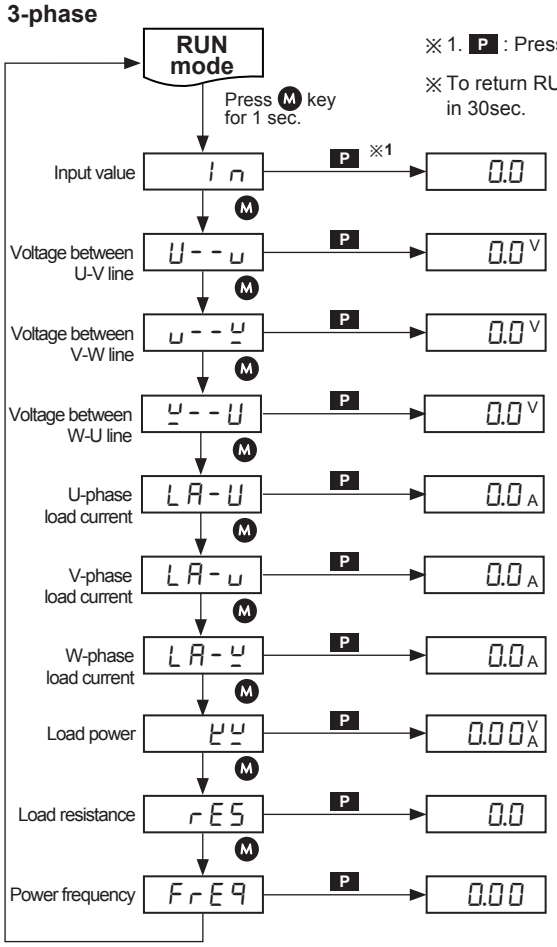

※1. P : Press any key among ▲, ▼.

※To return RUN mode, press the RET key at any parameter, or not to operate any keys in 30sec.

For ON/OFF input, or SSR pulse input, it displays 0 or 100.
• Set range : Within 0.0 to 100.0%

Monitors measured voltage at load within the rated voltage range.

Monitors measured current at load within the rated current range.

Monitors load power output at 3-phase.

Displays LLLL, 10 to 500%, HHHH.

Displays frequency of power within 45.0 to 65.0Hz range

Parameter mode

■ Operating Mode [oP]

※1. P : Press any key among ▲, ▼.

※To return RUN mode, press the RET key at any parameter, or not to operate any keys in 30sec.

※ [ ]: This parameter may or may not appear, depending on the other parameter settings.

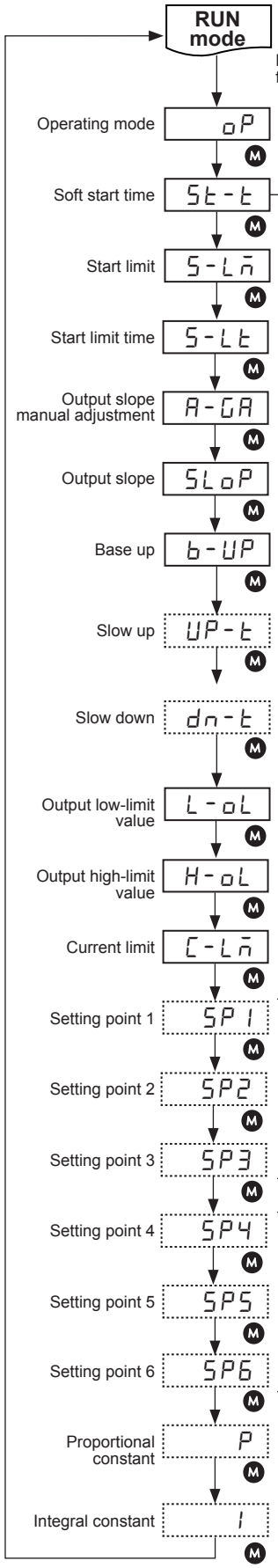

Displays operating mode.

Set soft start time.
• Set range : 0 to 100sec

Set limit output value.
• Set range : 0 to 110%

Set start limit time.
• Set range : 0 to 100sec

Set output slope manual adjustment. on ↔ oFF

Set output change ratio by control input.
• Set range : 0.00 to 1.00%
※Not displayed when output slope manual adjustment [A-GA] is ON.

Set base-up value.
• Set range : 0 to 100%

Set slow-up time.
• Set range : 0 to 999sec
※Not displayed when C-nd mode is set as cycle control.

Set slow-down time.
• Set range : 0 to 999sec
※Not displayed when C-nd mode is set as cycle control.

Set output low-limit.
• Set range : 0 to 110%

Set output high-limit.
• Set range : 0 to 110%

Set current limit value.
• Set range : 0 to 110%

• Set range : 0 to 100%
※ Displayed only when di-1 to di-3 of St-1 mode is set SP-n or SP1 to SP3.

• Set range : 0 to 100%
※ Displayed only when di-1 of St-1 is set SP-n.

Set proportional constant.
• Set range : 1 to 2000
※ Displayed only for static voltage, static current, static power in phase control.

Set integral constant.
• Set range : 0.1 to 999.9
※ Displayed only for static voltage, static current, static power in phase control.

■ Setting Mode 1

※1. P : Press any key among ▲, ▼.

※If there is no operation any keys in 30sec., it returns to RUN mode.

※Press the RET key when entering St-1 setting mode in any parameters, it moves to St-1. Press the RET key once more, it returns to RUN mode.

※When setting [LoCK] as LoC2 or LoC3, and entering St-1, it displays only [LoCK] parameter.

※ : This parameter may or may not appear, depending on the other parameter settings.

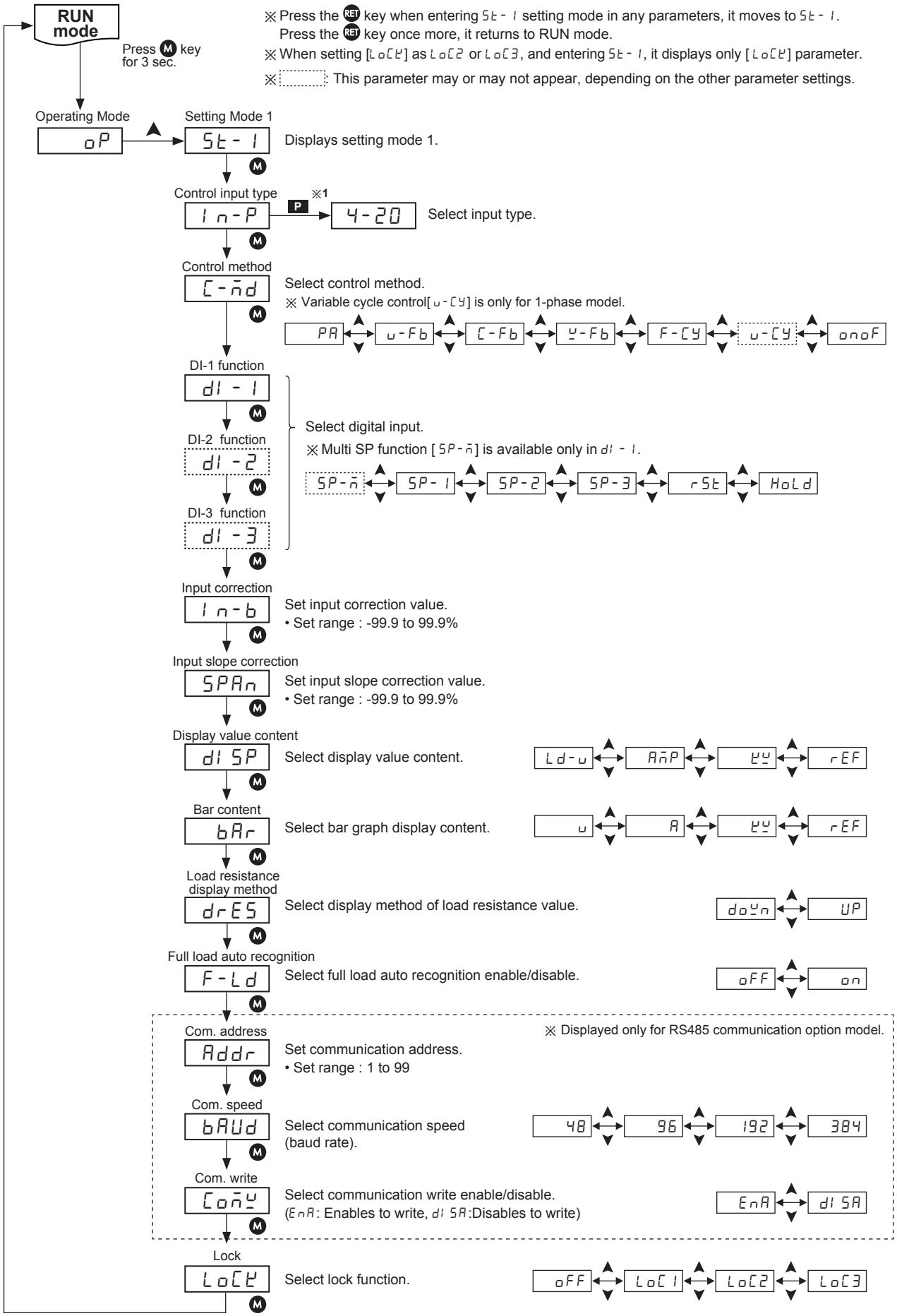

■ Setting Mode 2

※1. P : Press any key among ▲, ▼.

※If there is no operation any keys in 30sec., it returns to RUN mode.

※Press the RET key when entering St-2 setting mode in any parameters, it moves to St-2. Press the RET key once more, it returns to RUN mode.

※When setting [LoCK] as LoC2 or LoC3, and entering St-2, it displays only [LoCK] parameter.

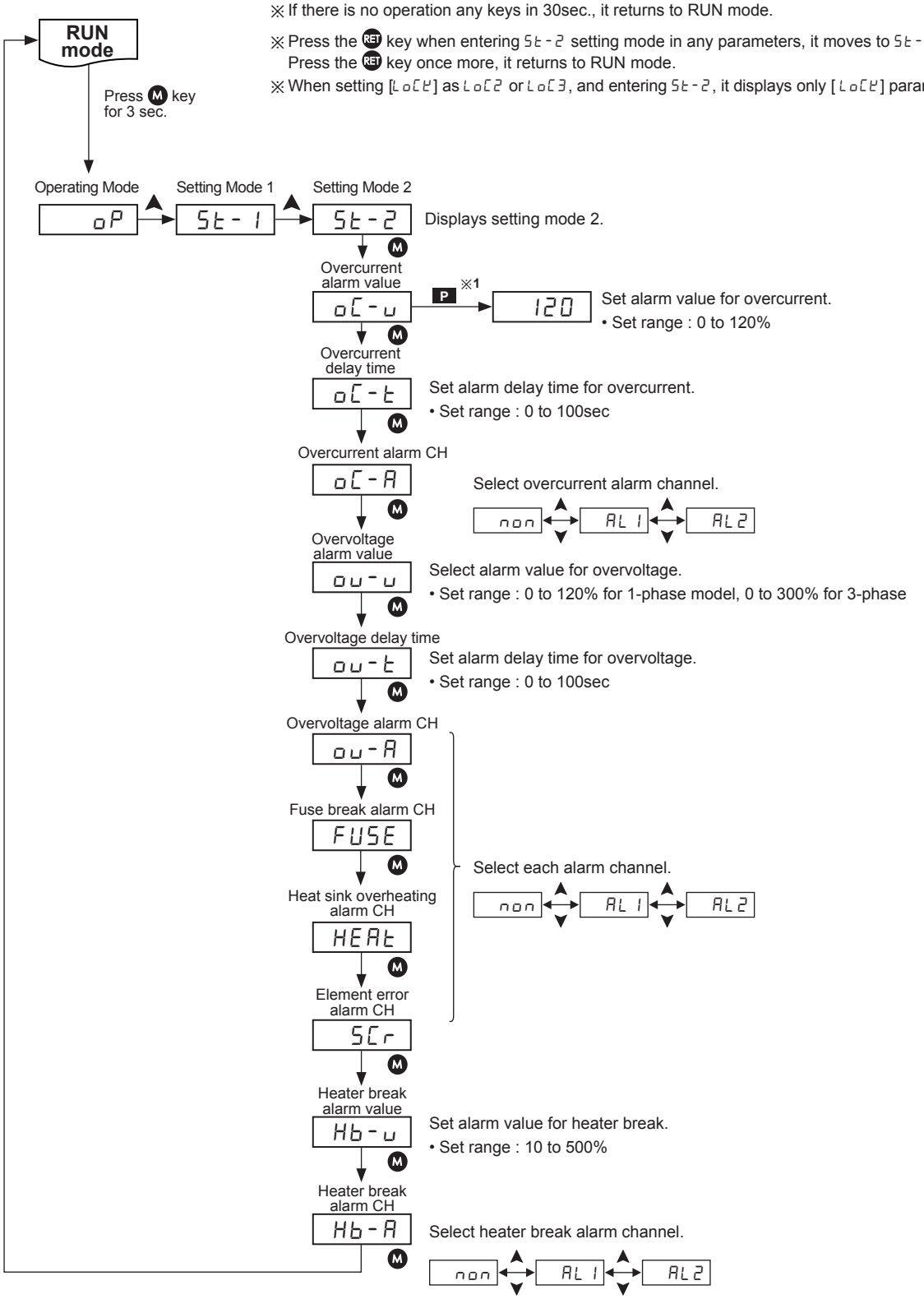

Factory default

■ Operating Mode

Parameter	Default	Parameter	Default	Parameter	Default	Parameter	Default
St-t	0000	b-UP	000.0	C-Lñ	110.0	SP5	000.0
S-Lñ	110.0	UP-t	0003	SP1	000.0	SP6	000.0
S-Lt	0000	dn-t	0003	SP2	000.0	P	0150
A-GA	oFF	L-oL	000.0	SP3	000.0	I	020.0
SLoP	1.000	H-oL	110.0	SP4	000.0		

■ Setting Mode 1

Parameter	Default	Parameter	Default	Parameter	Default	Parameter	Default
In-P	4-20	In-b	000.0	bAr	(1-phase) u	CoñY	EnA
C-ñd	PA	SPAn	000.0		(3-phase) U-u	LoCK	oFF
dI-1	SP-ñ	dISP	(1-phase) Ld-u	F-Ld	oFF		
dI-2	SP-1		(3-phase) U-u	Addr	0001		
dI-3	SP-1	drES	doYn	bAUd	384		

■ Setting Mode 2

Parameter	Default	Parameter	Default	Parameter	Default	Parameter	Default
oC-u	110.0	ou-u	110.0	FUSE	AL1	Hb-u	010.0
oC-t	0005	ou-t	0005	HEAt	AL1	Hb-A	AL2
oC-A	AL1	ou-A	AL1	SCr	AL1		

Communications

■ Communication specification

Item	Specifications
Com. method	RS485 2-wire half duplex
Com. speed	4800, 9600, 19200, 38400bps (default 38400)
Data length	8Bit
Stop Bit	1Bit
Parity	Even
Max. connections	32 units
Protocol	MODBUS 1.1 RTU

■ Function code format

◎ Function code 3(0×03) = Read holding registers

● Request (Master → Slave)

0×01	0×03	0×00	0×00	0×00	0×16	××	××
Add.	Com-mand	Start add.		Number of data		CRC 16	
		High	Low	High	Low	High	Low

● Response (Slave → Master)

0×01	0×03	0×10	0×03	0×E8	...	0×03	0×E8	××	××
Add.	Response command	Number of data	1st data		...	16th data		CRC 16	
			High	Low	...	High	Low	High	Low

● Error (Slave → Master)

0×01	0×83	××	××	××
Address	Response command	Exception code	CRC 16	

◎ Function code 4(0×04) = Read input registers

● Request (Master → Slave)

0×01	0×04	0×00	0×00	0×00	0×10	××	××
Add.	Com-mand	Start add.		Number of data		CRC 16	
		High	Low	High	Low	High	Low

● Response (Slave → Master)

0×01	0×04	0×10	0×03	0×E8	...	0×03	0×E8	××	××
Add.	Response command	Number of data	1st data		...	16th data		CRC 16	
			High	Low	...	High	Low	High	Low

● Error (Slave → Master)

0×01	0×84	××	××	××
Address	Response command	Exception code	CRC 16	

◎ Function code 6(0×06) = write single registers

● Request (Master → Slave)

0×01	0×06	0×00	0×00	0×03	0×E8	××	××
Add.	Com-mand	Address		Number of data		CRC 16	
		High	Low	High	Low	High	Low

● Response (Slave → Master)

0×01	0×06	0×00	0×00	0×03	0×E8	××	××
Add.	Response Command	Address		Data		CRC 16	
		High	Low	High	Low	High	Low

● Error (Slave → Master)

0×01	0×86	××	××	××
Address	Response command	Exception code	CRC 16	

◎ Function code 16(0×10) = write multiple registers

● Request (Master → Slave)

0×01	0×10	0×00	0×00	0×00	0×10	0×20	××	××
Add.	Com-mand	Start add.		Number of data		Number of byte	CRC 16	
		High	Low	High	Low		High	Low

● Response (Slave → Master)

0×01	0×10	0×00	0×00	0×03	0×E8	××	××
Add.	Response command	Start add.		Number of data		CRC 16	
		High	Low	High	Low	High	Low

● Error (Slave → Master)

0×01	0×90	××	××	××
Address	Response Command	Exception code	CRC 16	

※ Exception code

·0×01 : Not supported command code

·0×02 : Starting address of required data and transmittable address are different.

·0×03 : The number of required data is over than the number of transmittable data.

·0×04 : Transmittable data does not process properly.

■ Address mapping table

◎ Input registers [1-phase]

Address	Item	Factor
30001(0000)	Output voltage	*0.1
30002(0001)	Load current	*0.1
30003(0002)	Power	*0.1
30004(0003)	Load resistance	*0.1
30005(0004)	Power frequency	*0.01
30006(0005)	W-phase load current display(Arms)	*0.1
30101(0064)	Product No. H	00
30102(0065)	Product No. L	00
30103(0066)	Hardware version	10
30104(0067)	Software version	10
30105(0068)	Model name 1	"DP"
30106(0069)	Model name 2	"2-"
30107(006A)	Model name 3	"00"
30108(006B)	Model name 4	" "
30109(006C)	Model name 5	" "
30110(006D)	Model name 6	" "
30111(006E)	Model name 7	" "
30112(006F)	Model name 8	" "
30113(0070)	Model name 9	" "
30114(0071)	Model name 10	" "
30115(0072)	Reserved	Reserved
30116(0073)	Reserved	Reserved
30117(0074)	Reserved	Reserved
30118(0075)	Coil start address	0
30119(0076)	Coil quantity	0
30120(0077)	Input start address	0
30121(0078)	Input quantity	0
30122(0079)	Holding reg start address	0
30123(007A)	Holding reg quantity	32
30124(007B)	Input reg start address	0
30125(007C)	Input reg quantity	5

◎ Input registers [3-phase]

Address	Item	Factor
30001(0000)	Load voltage between U-V line display (Vrms)	*0.1
30002(0001)	Load voltage between V-W line display(Vrms)	*0.1
30003(0002)	Load voltage between W-U line display(Vrms)	*0.1
30004(0003)	U-phase load current display(Arms)	*0.1
30005(0004)	V-phase load current display(Arms)	*0.1
30006(0005)	W-phase load current display(Arms)	*0.1
30007(0006)	Power display(kw)	*0.01
30008(0007)	Load resistance display (% display for initial load)	*0.1
30009(0008)	Power frequency display	*0.01
30101(0064)	Product No. H	00
30102(0065)	Product No. L	00
30103(0066)	Hardware version	10
30104(0067)	Software version	10
30105(0068)	Model name 1	"DP"
30106(0069)	Model name 2	"2-"
30107(006A)	Model name 3	"00"
30108(006B)	Model name 4	" "
30109(006C)	Model name 5	" "
30110(006D)	Model name 6	" "
30111(006E)	Model name 7	" "
30112(006F)	Model name 8	" "
30113(0070)	Model name 9	" "
30114(0071)	Model name 10	" "
30115(0072)	Reserved	Reserved
30116(0073)	Reserved	Reserved
30117(0074)	Reserved	Reserved
30118(0075)	Coil start address	0
30119(0076)	Coil quantity	0
30120(0077)	Input start address	0
30121(0078)	Input quantity	0
30122(0079)	Holding reg start address	0
30123(007A)	Holding reg quantity	32
30124(007B)	Input reg start address	0
30125(007C)	Input reg quantity	5

■ Address mapping table

◎ Holding registers [1-phase]

Address	Item	Factor
40001(0000)	Reference value	* 0.1(1 to 1000)
40002(0001)	Start Time	0 to 99
40003(0002)	Start limit	* 0.1(1 to 1000)
40004(0003)	Soft Start Time	0 to 99
40005(0004)	Output high-limit limit	* 0.1(1 to 1100)
40006(0005)	Output low-limit limit	* 0.1(1 to 1000)
40007(0006)	Remote Sp1 value	* 0.1(1 to 1000)
40008(0007)	Remote Sp2 value	* 0.1(1 to 1000)
40009(0008)	Remote Sp3 value	* 0.1(1 to 1000)
40010(0009)	Remote Sp4 value	* 0.1(1 to 1000)
40011(000A)	Remote Sp5 value	* 0.1(1 to 1000)
40012(000B)	Remote Sp6 value	* 0.1(1 to 1000)
40013(000C)	Slow up time	0 to 99
40014(000D)	Slow stop time	0 to 99
40015(000E)	CL value	* 0.1(1 to 2000)
40016(000F)	OC value	* 0.1(1 to 1100)
40017(0010)	OC time	0 to 99
40018(0011)	OV value	* 0.1(1 to 1100)
40019(0012)	OV time	0 to 99
40020(0013)	Load detector alarm value	* 0.1(1 to 2000)
40021(0014)	Display content selection	0 to 3
40022(0015)	Bar display mode	0 to 3
40023(0016)	Control integer KP value	0 to 9999
40024(0017)	Control integer KI value	* 0.1(1 to 999.9)
40025(0018)	Output control mode	0 to 6
40026(0019)	Event input 1 mode	0 to 4
40027(001A)	Event input 2 mode	0 to 4
40028(001B)	Event input 3 mode	0 to 4
40029(001C)	Auto ref input selector	0 to 3
40030(001D)	Load resistance display method	0 to 1
40031(001E)	Operation status 0×0000	Bit0... Fault Bit1... I-OC Bit2... Over current Bit3... Over volt Bit4... Over temp Bit5... Fuse cut Bit6... Phase loss Bit7... Load open Bit8... Over SCR Bit9... Over Freq Bit10... Run/Stop Bit11... Auto/Manual Bit12... EMS Power Bit13... Not Load
40032(001F)	Output slope(%)	0 to 2
40033(0020)	Output for 0% input(%)	0 to 2
40034(0021)	Input correction	0 to 2
40035(0022)	Input slope correction	0 to 2
40036(0023)	Overcurrent alarm output	0 to 2
40038(0025)	Overvoltage alarm output	0 to 2
40039(0026)	Fuse break alarm output	0 to 2
40040(0027)	Frequency error alarm output	0 to 2
40041(0028)	Heatsink overheat alarm output	0 to 2
40042(0029)	Element error alarm output	0 to 2
40044(002A)	Heater break alarm output	0 to 2

■ Address mapping table

◎ Holding registers [3-phase]

Address	Item	Parameter	Factor	
40001(0000)	Reference value	In	0.0 to 100.0 (*0.1)	
40002(0001)	Soft start time	St-t	0 to 100 (*1)	
40003(0002)	Start limit	S-Lm	0.0 to 110.0 (*0.1)	
40004(0003)	Start limit time	S-Lt	0 to 100 (*1)	
40005(0004)	High output limit	H-oL	0.0 to 110.0 (*0.1)	
40006(0005)	Low output limit	L-oL	0.0 to 110.0 (*0.1)	
40007(0006)	SP1	SP-1	0.0 to 100.0 (*0.1)	
40008(0007)	SP2	SP-2	0.0 to 100.0 (*0.1)	
40009(0008)	SP3	SP-3	0.0 to 100.0 (*0.1)	
40010(0009)	SP4	SP-4	0.0 to 100.0 (*0.1)	
40011(000A)	SP5	SP-5	0.0 to 100.0 (*0.1)	
40012(000B)	SP6	SP-6	0.0 to 100.0 (*0.1)	
40013(000C)	Slow up	UP-t	0 to 999 (*1)	
40014(000D)	Slow down	dn-t	0 to 999 (*1)	
40015(000E)	Current limit	C-Lm	0.0 to 110.0 (*0.1)	
40016(000F)	Over current value	oC-u	0.0 to 120.0 (*0.1)	
40017(0010)	Over current time	oC-t	0 to 100 (*1)	
40018(0011)	Over voltage value	ou-u	0.0 to 300.0 (*0.1)	
40019(0012)	Over voltage time	ou-t	0 to 100 (*1)	
40020(0013)	Heater break value	Hb-u	10.0 to 500.0 (*0.1)	
40021(0014)	Display selected contents	diSP	0 to 7 (*1)	0: U-V 1: V-W 2: W-U 3: LA-U 4: LA-V 5: LA-W 6: KW 7: REF
40022(0015)	Bar graph's content	bAr		
40023(0016)	Proportional value	P	1 to 2000 (*1)	
40024(0017)	Integral value	I	0.1 to 999.9 (*0.1)	
40025(0018)	Control method	C-md	1 to 6 (*1)	1: F-CY 2: ONOF 3: PA 4: V-FB 5: C-FB 6: W-FB
40026(0019)	Digital input 1	di-1	0 to 5 (*1)	0: SP-M 1: SP-1 2: SP-2 3: SP-3 4: RST 5: HOLD
40027(001A)	Digital input 2	di-2	1 to 5 (*1)	1: SP-1 2: SP-2 3: SP-3 4: RST 5: HOLD
40028(001B)	Digital input 3	di-3		
40029(001C)	Control input type	in-P	0 to 6 (*1)	0: 4-20 1: 0-20 2: 1-5 3: 0-5 4: 0-10 5: SSR 6: COM
40030(001D)	Load resistance display method selection	drES	0 to 1(*1)	0: DOWN 1: UP
40031(001E)	Operation status	–		Bit0... Fault Bit1... I-OC Bit2... Over current Bit3... Over volt Bit4... Over temp Bit5... Fuse cut Bit6... Phase loss Bit7... Load open Bit8... Over SCR Bit9... Over Freq Bit10... Run/Stop Bit11... Auto/Manual Bit12... EMS Power
40032(001F)	Output slope	SLoP	0.000 to 1.000 (*0.001)	
40033(0020)	Base up setting	b-UP	0.0 to 100.0 (*0.1)	
40034(0021)	Input correction	in-b	-99.9 to +99.9 (*0.1)	
40035(0022)	Span	SPAn	-99.9 to +99.9 (*0.1)	
40036(0023)	Over current alarm	oC-A	0 to 2 (*1)	0: NON 1: AL1 2: AL2
40038(0025)	Over voltage alarm	ou-A		
40039(0026)	Burn out fuse alarm	FUSE		
40041(0028)	Heat sink temperature abnormal condition alarm	HEAt		
40042(0029)	Thyristor abnormal condition alarm	SCr		
40044(002B)	Heater break alarm	Hb-A		