Orientalmotor

Stepper Motor and Driver Package αSTEP

AZ Series

Equipped with Battery-Free Absolute Sensor

ADVANCED

PERFORMANCE

Absolute × Battery-Free
Brings advanced POSITIONING close to hand.

The new **AZ** Series line-up achieves absolute positioning without the need for a battery.
As a battery is not needed this contributes to a reduction in total cost.
So the **AZ** Series offers absolute positioning for an affordable price.

＊See page 12 for details on the lineup.

Stepper Motor and Driver Package αSTEP

AZ Series

Equipped with Battery-Free Absolute Sensor

■ Lineup

Standard Options	□20 mm/□28 mm/□85 mm
Geared Options with Electromagnetic Brake	□42 mm/□60 mm/□90 mm

ADVANCED PERFORMANCE

Achieve a battery-free absolute system by equipping with a newly developed ABZO sensor.

Equipped with battery-free mechanical absolute sensor.

[Details on page 5]

Speedy homing with less cabling as external sensors no longer required.

[Details on page 6]

The battery-free nature of the AZ Series allows for easy global shipping, even with long delivery times.

[Details on page 7]

Peace of mind and energy savings with our highly reliable & efficient **AZ** motor series.

Setup is simple due to usable functions and settings.

Save energy with a highly reliable and efficient αSTEP motor.

[Details on page 8]

Two drivers can be selected via a master controller.

[Details on page 9]

Construct a simple system without a separate pulse generator.

[Details on page 10]

Setup time is reduced due to helpful in-built test functions.

[Details on page 10]

Monitor functions allow for easy analysis of the motor running condition, facilitating timely maintenance.

[Details on page 11]

Equipped with a newly developed ABZO sensor, this is advanced technology at an affordable price.

Newly developed **ABZO** sensor

We have developed a compact, low cost, battery-free mechanical absolute sensor (patented). This affordable motor series allows for productivity improvements and cost reductions.

● Mechanical Sensor

Analog clocks measure the current time based on the positions of the second hand, minute hand and hour hand. ABZO sensor is a mechanical sensor equipped with multiple gears equivalent to the hands on a clock. As it detects positioning information by detecting the angles of the respective gears, a battery is not required.

● Multirotation Absolute System

Absolute position detection is possible with ±900 rotations (1800 rotations)* of the motor shaft from the home position.

* The frame sizes 20 and 28 mm are ±450 rotations (900 rotations).

● Home Position Setting

By pressing the switch on the driver surface home position can be set simply, and the home position can be saved with the ABZO sensor. Furthermore, it is possible to set the home position using the data setting software (**MEXE02**) or the external input signal.

・Basic principles are like an analog clock

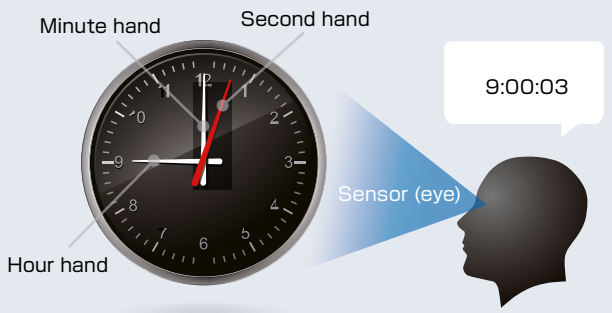

・Home Position Setting

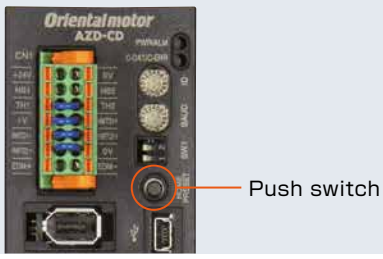

Achieves a Battery-Free Absolute System.

External Sensors Not Required

As it is an absolute system, external sensors such as the home sensor or limit sensor are not required.

● High Speed Return-to-Home + Improved Return-to-Home Accuracy

Because return-to-home is possible without using an external sensor, return-to-home can be performed at high speed without taking the sensor sensitivity into account, allowing for a shortened machine cycle. Furthermore, as return-to-home can be performed without concern for differences in the home sensor, it is possible to improve home position accuracy.

Pre-ABZO homing method example

The home position is detected at low speed by detecting the limit sensor (±LS) and home sensor (HOME).

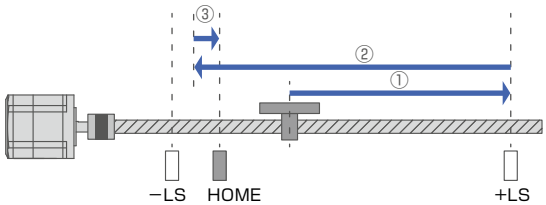

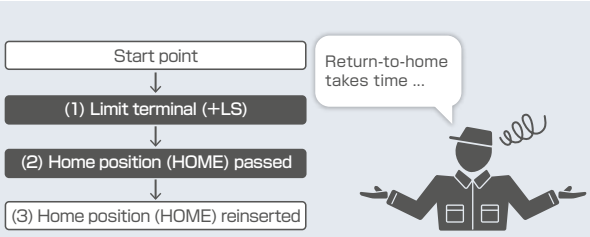

AZ Series utilising ABZO sensor homing method

There is no need to detect the limit sensor, and it moves directly at high speed to the home position recorded by the ABZO sensor.

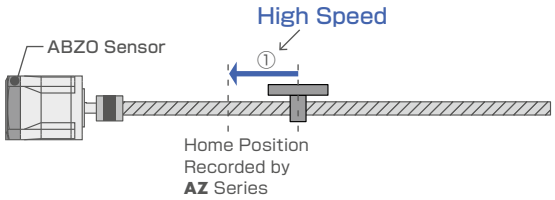

● Cost reductions

Sensor costs and cable costs can be reduced, leading to lower system costs.

● Cable savings

This reduces cabling, increasing device design degree of freedom.

● Not affected by sensor

The AZ Series eliminates concerns such as sensor malfunctions, sensor faults or disconnection of the sensor lines. For example, sensor malfunctions due to metal flakes or oil mist floating about in the environment will be prevented.

●In systems where limit switches are not possible, software limits can be used to prevent the limit values being exceeded.

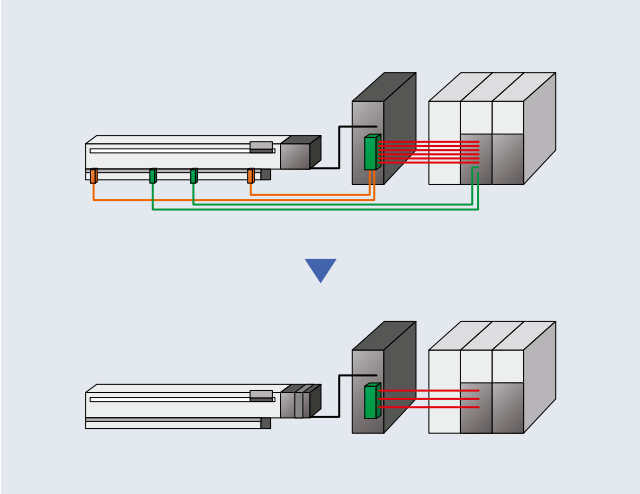

Battery-Free ABZO Sensor

As this is a mechanical sensor, a battery is not necessary.
The positioning information is managed mechanically
by the ABZO sensor.

● Maintaining Positioning Information

Even if the power shuts down during a positioning operation, the positioning information is retained. Furthermore, for built-in controller types, positioning operations can restart without performing a return-to-home operation when recovering from an emergency stop of the production line or a power cut.

●If the motor is temporarily replaced it is necessary to reset the home position as the positioning information is stored in the ABZO sensor.

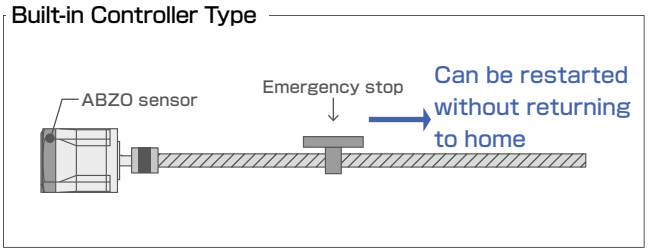

● Reduction in Maintenance

There is no need to replace the battery, so the effort and cost of maintenance is reduced.

● Drivers take up less Space

As space is not required for the battery, this frees up space within the panel for other purposes.

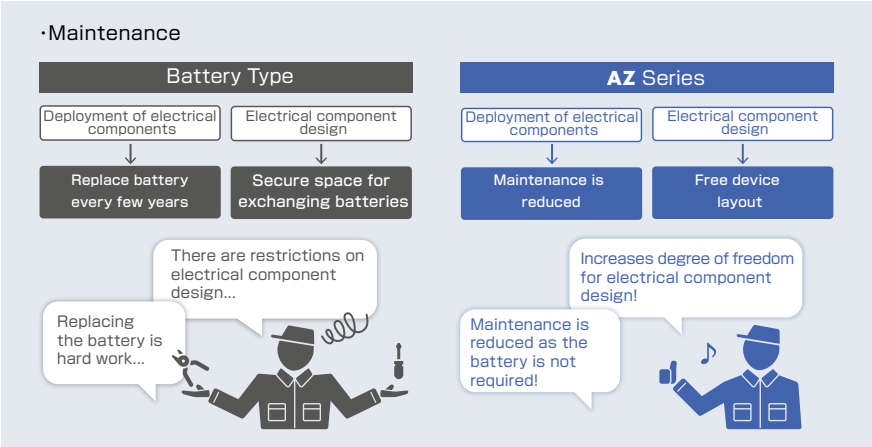

● Safe for Overseas Shipping

As normal batteries are self discharging, care is required when transporting the device over long periods, such as in the case of overseas shipments. ABZO sensors do not require batteries, so there is no deadline for the storage of positioning information. Furthermore, there is no need to consider the respective regulations etc. when exporting overseas.

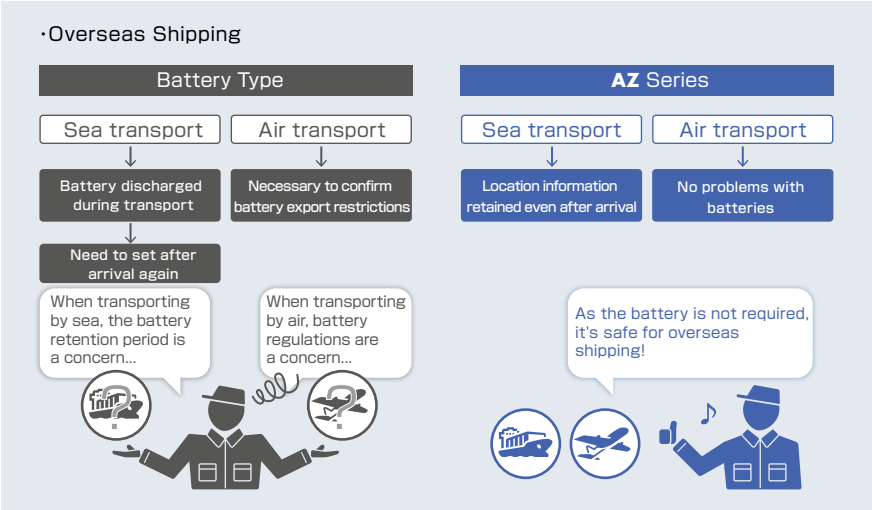

Save Energy with High Reliability and High Efficiency of αSTEP

High Reliability

We have adopted a proprietary control system.

We have achieved high reliability by linking the benefits of open loop control and closed loop control.

● Keeps driving even in the case of sudden load changes or sudden acceleration

Normally it drives with open loop control in sync with the pulse commands . At times of overload, control instantly switches to control using a closed loop, and perform positioning correction.

● Tuning not required

As normally it drives with open loop control, when there is a change in load, such as in the belt mechanism, cam and chain drive, the positioning can be determined without gain adjustment.

● Outputs an alarm signal in case an abnormality occurs

When overload continuously occurs, an alarm signal is output and when positioning determination is complete, a signal is output. This supports high reliability.

● Storing of stop position

When determining positioning, it stops using the motor's own holding torque without hunting. Therefore it is suitable for use in a situation where vibration could cause a problem when stopping due to a low-rigidity mechanism.

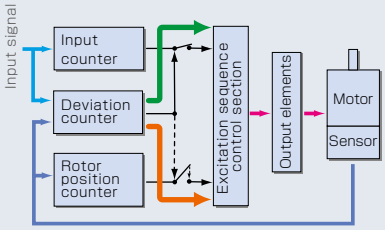

Normal (position deviation is less than ±1.8°)

Control is performed in open mode in the same way as with a stepper motor.

During overload, (position deviation is ±1.8° or more)

Control switches to closed mode to keep driving.

Energy Saving

Energy saving is also achieved by reducing motor heat generation through high efficiency.

● Reduced heat generation

We have achieved a significant decrease in heat generation through high efficiency.

● The amount of power consumption has been reduced to 47% of its previous levels through energy saving

・Temperature distribution using thermography

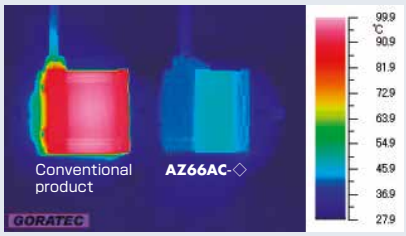

This is an image when driving under the same conditions.

・Motor surface temperature during operation under the same conditions

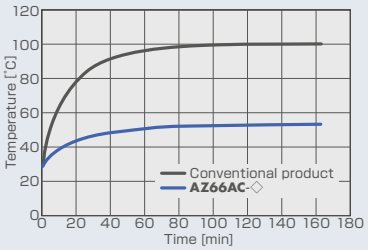

・Power consumption

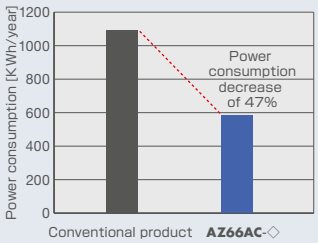

CO2 emissions have reduced by 47% compared to the previous levels

Drive conditions

Rotation speed 1000 r/min, load factor 50%
Usage time: 24 hour operation (drive 70%, standby 25%, stop 5%), 365 days/year

Two drivers that can be chosen based on the master control system.

Built-in Controller Type

Pulse-Input Type

What is FLEX?

FLEX is the collective name for products supporting I/O control, Modbus (RTU) control and FA network control via network converters. This enables simple connections and simple control and this shortens the total lead time for system construction.

Built-in Controller Type

The built-in controller type driver allows for up-to 256 items of operating data, such as motor speed, position, acceleration / deceleration, interrupts, etc to be executed by a master controller via (1) I/O, (2) Modbus (RTU)/RS-485 or (3) FA network.

Basic Settings (setting when shipped)

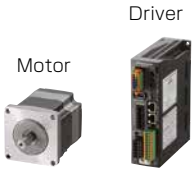

Operating Data Settings Parameter Changes

Data setting software (**MEXE02**)

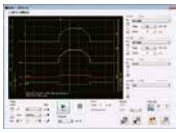

●Alternatively this can be set using RS-485 communications.

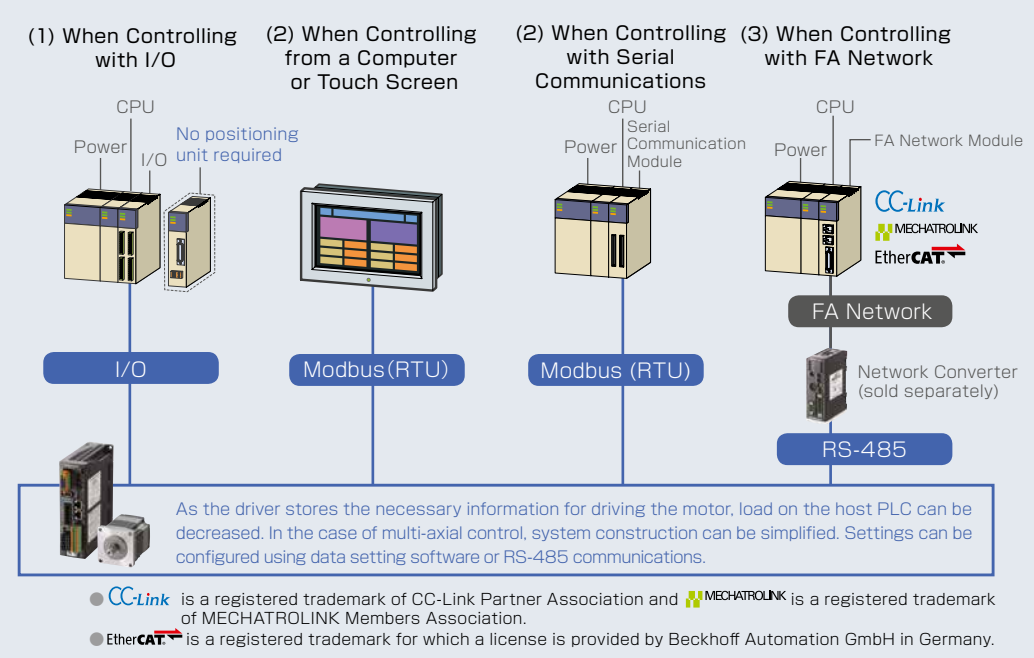

● CC-Link is a registered trademark of CC-Link Partner Association and MECHATROLINK is a registered trademark of MECHATROLINK Members Association.
● EtherCAT is a registered trademark for which a license is provided by Beckhoff Automation GmbH in Germany.

Through the use of network converters (sold separately), CC Link, MECHATROLINK and EtherCAT communications are supported. Through the available communication protocols it is possible to set the operating data, parameters, and operating commands, allowing for shorter design and build times.

Pulse-Input Type

The pulse-input type driver is driven by a pulse and direction input from a host PLC. Motion control is carried out via a pulse generator; an add on module to the PLC which must be prepared by the customer.

Basic Settings (setting when shipped)

By using the data setting software (**MEXE02**), it is possible to confirm alarm history and monitor the various states.

●Data setting software (**MEXE02**) can be downloaded from the website.

Simple Settings and Usable Functions that could not be realized without **AZ**

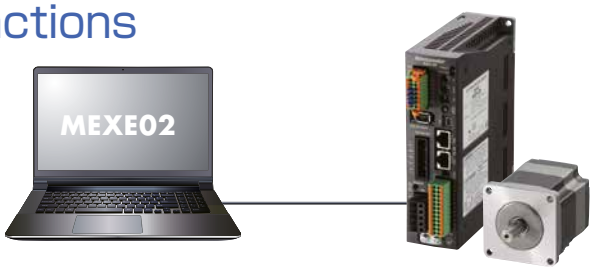

Data setting software **MEXE02**

Data setting software can be downloaded from the website.

Simple Settings/Easy Operations

By using the **MEXE02** software it is possible to adjust the motor configuration and edit multiple operating and parameter settings. Furthermore, the built-in controller is able to carry out sequential control from multiple inputs or predefined interrupts without requiring a master controller.

● Unit-type setting wizard

The units wizard is a function which allows the engineer to input the units they wish to work with. Thereby reducing the burden of converting units when inputing operational data.

● A simple system can be realised without a master controller.

The built-in controller type driver can set and execute independently up-to 256 items of operating data, such as motor speed and index length. Furthermore, with sequential control it is possible to form a simple system without a master controller. This is ideal for index and return operations or aligned transportation, such as lifespan / durability tests.

In case of questions please use our free hotline:
00800 22 55 66 22

Test Functions

Function for driving the motor independently and with which it is possible to connect with the master control system. By using during device startup, this can help to save time.

● Teaching Remote Operation At startup

It is possible to simply set home positions and drive the motor from the data setting software. Before connecting to the master control system, as it can perform teaching and test operations, this contributes to saving time for device startup.

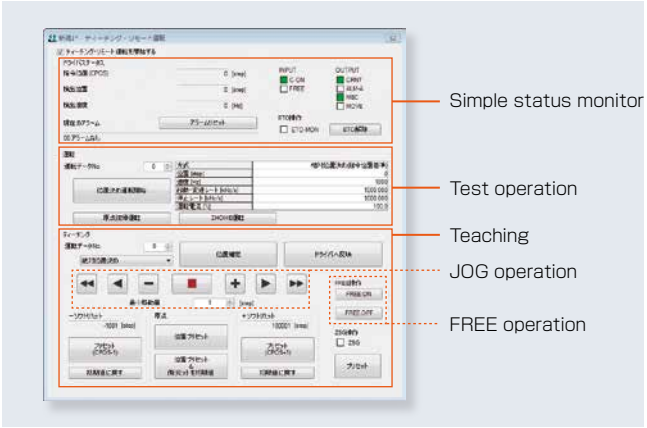

● I/O Test At startup When driving

You can perform input signal monitoring and output signal forced output. This is a convenient function for confirming hard wiring with the master control system and the network I/O operation.

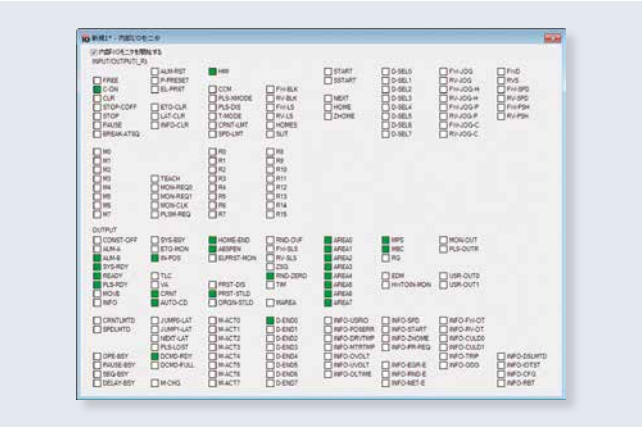

Monitor Function

Excellent monitor functions are included in order to confirm the motor driving state.
Using differently based on the various scenarios helps with device startup, shortening of adjustment time and efficient maintenance.

● Waveform Monitoring At startup

It is possible to monitor the motor driving state and output signal state in the same way as with an oscilloscope. Use this when starting up or adjusting the device.

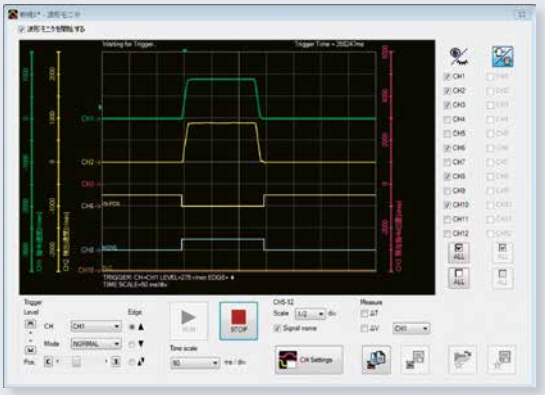

● Alarm Monitoring When driving During maintenance

When an abnormality occurred, it is possible to confirm the content of the abnormality, driving state when it occurred, and countermeasure methods. As the countermeasure method can be confirmed, the abnormality can be handled smoothly.

● Status Monitoring When driving During maintenance

When driving, it is possible to monitor speed, motor/driver temperature and load rate, as well as total revolutions from start of use. For the various items, as it is possible to set any signal to output, this is effective for efficient maintenance.

The actual position is detected in relation to the command position.

The actual speed is detected in relation to the command speed.

Detects the temperature within the motor encoder part and driver.

Displays the current load rate, given that the output torque for the speed during rotation is 100%.

Lineup

Motor and Driver Types

Motor Type	Electro-magnetic Brake	Power Input	Frame Size					Driver Type
		Single-Phase 100-120 VAC Single-Phase/Three-Phase 200-240 VAC 24/48 VDC	20 mm	28 mm	42 mm*2	60 mm	85 mm 90 mm*3	
Standard Type	No	AC	–	–	●	●	●	Built-in Controller Type
		DC	●*1	●*1	●	●	–	
	Yes	AC	–	–	●	●	●	
		DC	–	–	●	●	–	
TS Geared Type	No	AC	–	–	●	●	●	
		DC	–	–	●	●	–	
	Yes	AC	–	–	●	●	●	
		DC	–	–	●	●	–	
PS Geared Type	No	AC	–	–	●	●	●	
		DC	–	–	●	●	–	
	Yes	AC	–	–	●	●	●	
		DC	–	–	●	●	–	
HPG Geared Type	No	AC	–	–	●	●	●	Pulse-Input Type
		DC	–	–	●	●	–	
	Yes	AC	–	–	●	●	●	
		DC	–	–	●	●	–	
Harmonic Geared Type	No	AC	–	–	●	●	●	
		DC	–	–	●	●	–	
	Yes	AC	–	–	●	●	●	
		DC	–	–	●	●	–	

AC Power Input　DC Power Input

AC Power Input　DC Power Input

*1　24 VDC only
*2　**HPG** geared type is 40 mm
*3　in case of geared type

Actuator Lineup

We will introduce a lineup of actuators with the built-in **AZ** series.

Series Name	Features	Main Specification
αSTEP **AZ** Series Equipped Motorized Slider **EAS** Series AC power DC power 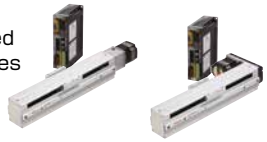	·Possible to drive at high speeds from light loads to heavy loads. ·Can drive stably even at low speeds (1.25 mm/s). ·Compact with high rigidity.	·Stroke: 50–850 mm ·High speed: 800 mm/s ·Maximum transportable mass: 60 kg (horizontal), 30 kg (vertical)
αSTEP **AZ** Series Equipped Motorized Slider **EZS** Series AC power DC power 	·Compact with high rigidity. ·Simple dust-proof structure. ·Clean room support (ISO standard clean level class 3)	·Stroke: 50–850 mm ·High speed: 800 mm/s ·Maximum transportable mass: 60 kg (horizontal), 30 kg (vertical)
αSTEP **AZ** Series Equipped Motorized Slider **EAC** Series AC power DC power 	·Possible to drive at high speeds from light loads to heavy loads. ·Can drive stably even at low speeds (1.25 mm/s). ·Compact with high rigidity. ·High thrust.	·Stroke: 50–300 mm ·High speed: 600 mm/s ·Maximum transportable mass: 60 kg (horizontal), 30 kg (vertical)
Hollow Rotary Actuator **DG**Ⅱ Series Frame Size 85 mm, 130 mm, 200 mm AC power 	·As this is a hollow output table, wiring, such as cables and air tubes etc. is simple. ·Possible to directly attach tables and arms.	·Maximum permissible torque: 50 N·m ·Maximum permissible moment: 100 N·m ·Maximum permissible axial load: 4000 Nm

Types and Features of Standard Types and Geared Types

	Type	Features	Permissible Torque, Instantaneous Maximum Torque [N·m]	Backlash [arcmin]	Basic Resolution [°/pulse]	Output Shaft Rotation Speed [r/min]
	Standard type 	·This is the basic **AZ** series model.	Excitation maximum static torque 4	—	0.36	6000
Low Backlash	**TS** Geared Type (Spur Gear Mechanism) 	·Good lineup of low reduction ratio types, high speed operation ·Gear ratios: 3.6, 7.2, 10, 20, 30	Permissible torque / Instantaneous maximum torque 25 45	10	0.012	833
Low Backlash	**PS** Geared Type (Planetary Gear Mechanism) 	·Permissible torque/ instantaneous maximum torque is large ·Lineup of gear ratios convenient for various step angles ·Center shaft ·Gear ratios: 5, 7.2, 10, 25, 36, 50	Permissible torque \ Instantaneous maximum torque 37 60	7	0.0072	600
Non-backlash	**HPG** Geared Type (Harmonic Planetary®) 	·High positioning accuracy ·Permissible torque/ instantaneous maximum torque is large ·Center shaft ·Gear ratios: 5, 9, 15	Permissible torque \ Instantaneous maximum torque 24 33	3	0.024	900
Non-backlash	Harmonic Geared Type (Harmonic Drive®) 	·High positioning accuracy ·Permissible torque/ instantaneous maximum torque is large ·High gear ratio, high resolution ·Center shaft ·Gear ratios: 50, 100	Permissible torque \ Instantaneous maximum torque 52 107	0	0.0036	70

Notes
- Please use the above values as reference to see the differences between each type. These values vary depending on the motor frame size and gear ratio.
- Harmonic planetary, harmonic drive and HD are registered trademarks and trademarks of Harmonic Drive Systems Inc.

As a variation on stepper motors, we have prepared a geared motor in which the gears are combined.
You can select the optimal type from among each geared motor, considering torque, accuracy (backlash) and price.

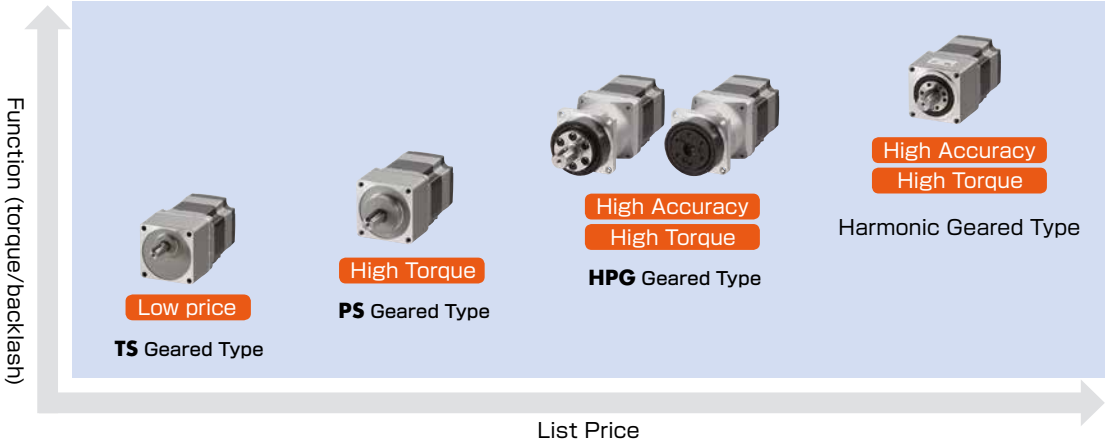

System Configuration

Built-in Controller Type with Electromagnetic Brake

Configuration example when using I/O control or RS-485 communications.

*1 Prepared by the customer.
*2 Only products to which the connection cables are attached.

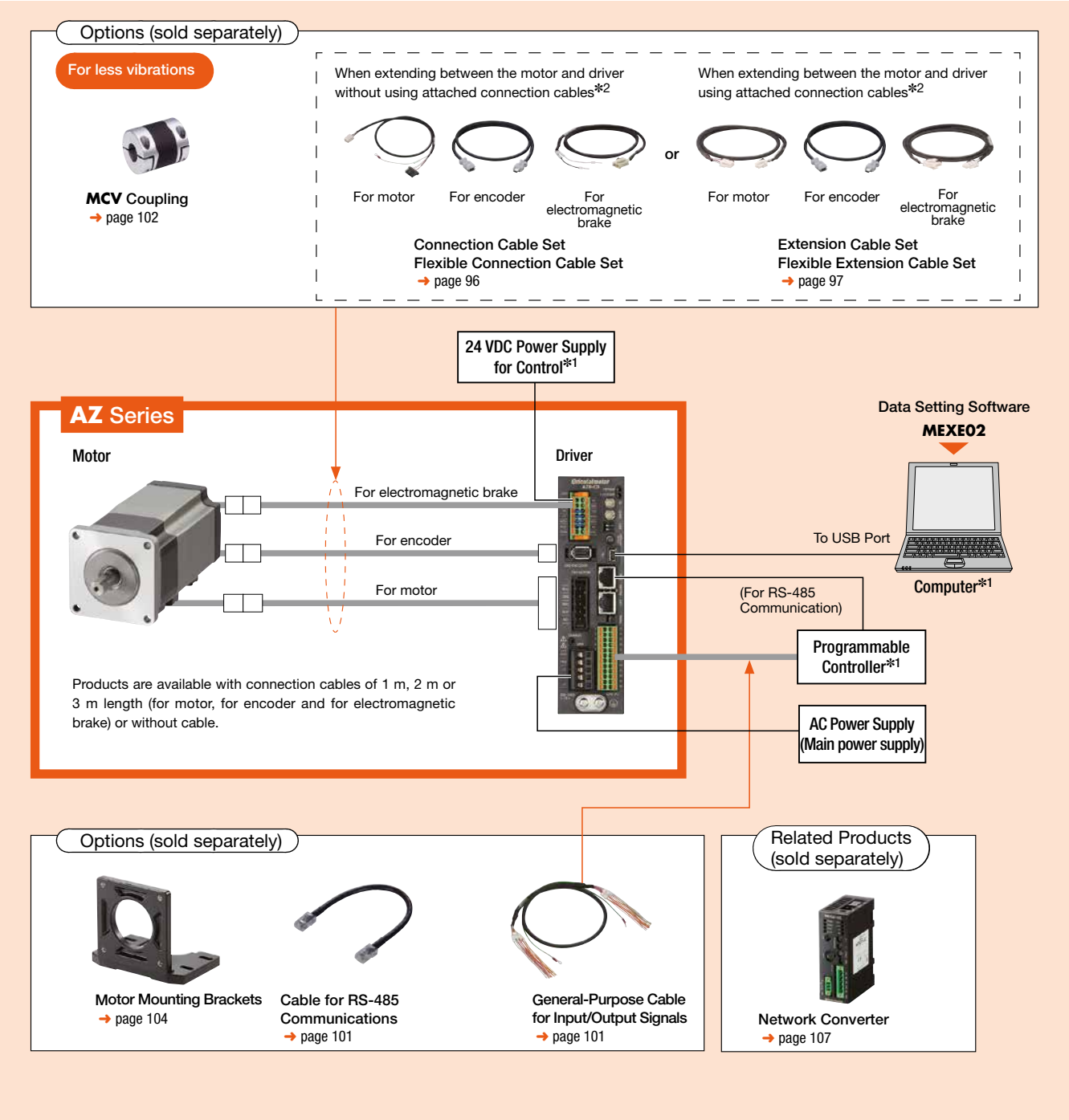

System Configuration Example

AZ Series	+	Sold Separately		
		Motor Mounting Bracket	Flexible Coupling	General-Purpose Cable (1 m)
AZ66MCD-3		PAL2P-5	MCV251010	CC16D010B-1

The system configuration described above is just an example. Other combinations are available.

Pulse-Input Type with Electromagnetic Brake

A single-axis system configuration with the **SCX11** Series controller is shown below.

*1 Prepared by the customer.
*2 Only products to which the connection cables are attached.

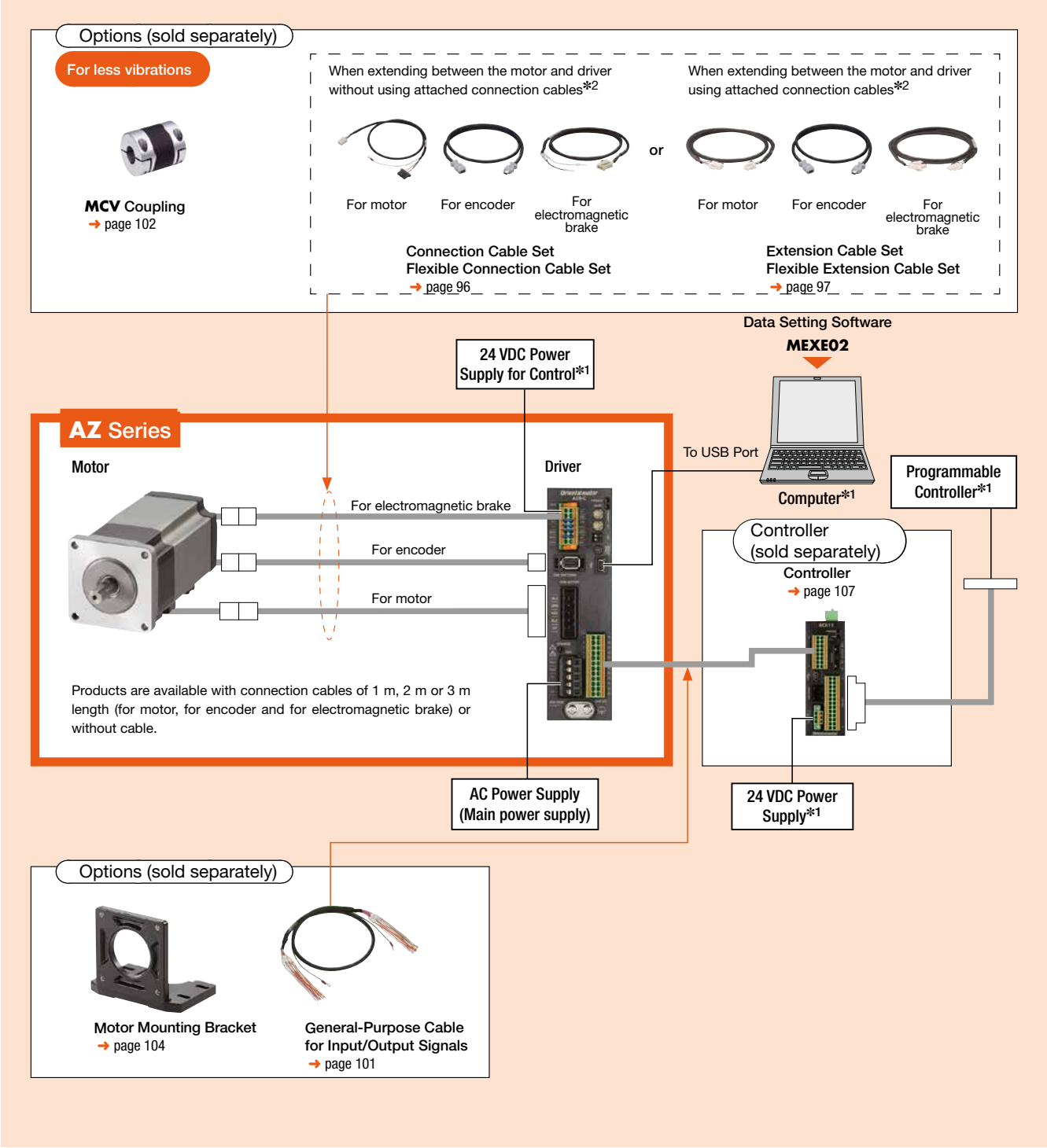

System Configuration Example

AZ Series	+	Sold Separately			
		Controller	Motor Mounting Bracket	Flexible Coupling	General-Purpose Cable (1 m)
AZ66MC-3		SCX11	PAL2P-5	MCV251010	CC16D010B-1

The system configuration described above is just an example. Other combinations are available.

Product Number Code

Standard Type

AZ 6 6 A C D - 1

① ② ③ ④ ⑤ ⑥ ⑩

Geared Types

AZ 6 6 A C D - HP 15 F - 1

① ② ③ ④ ⑤ ⑥ ⑦ ⑧ ⑨ ⑩

①	Series Name	**AZ**: **AZ** Series
②	Motor Frame Size	**4**: 42 mm (**HPG** Geared Type is 40 mm) **6**: 60 mm **9**: 85 mm (Geared Type is 90 mm)
③	Motor Case Length	
④	Configuration	**A**: Single Shaft **M**: With Electromagnetic Brake
⑤	Power Supply Input	**A**: Single-Phase 100-120 VAC **C**: Single-Phase/Three-Phase 200-240 VAC
⑥	Driver Type	**D**: Built-in Controller Type None: Pulse-Input Type
⑦	Geared Type	**TS**: **TS** Geared Type **PS**: **PS** Geared Type **HP**: **HPG** Geared Type **HS**: Harmonic Geared Type
⑧	Gear Ratio	
⑨	Output Shaft Type	**HPG** Geared Type None: Shaft Output **F**: Flange Output
⑩	Connection Cable	Figures: Included Connection Cable Length **1**: 1 m **2**: 2 m **3**: 3 m None: Connection Cable not included

Product Line

Built-in Controller Type

◇Standard Type

Product Name
AZ46A□D-◇
AZ66A□D-◇
AZ69A□D-◇
AZ98A□D-◇
AZ911A□D-◇

◇**TS** Geared Type

Product Name
AZ46A□D-TS3.6-◇
AZ46A□D-TS7.2-◇
AZ46A□D-TS10-◇
AZ46A□D-TS20-◇
AZ46A□D-TS30-◇
AZ66A□D-TS3.6-◇
AZ66A□D-TS7.2-◇
AZ66A□D-TS10-◇
AZ66A□D-TS20-◇
AZ66A□D-TS30-◇
AZ98A□D-TS3.6-◇
AZ98A□D-TS7.2-◇
AZ98A□D-TS10-◇
AZ98A□D-TS20-◇
AZ98A□D-TS30-◇

◇Standard Type with Electromagnetic Brake

Product Name
AZ46M□D-◇
AZ66M□D-◇
AZ69M□D-◇
AZ98M□D-◇

◇**TS** Geared Type with Electromagnetic Brake

Product Name
AZ46M□D-TS3.6-◇
AZ46M□D-TS7.2-◇
AZ46M□D-TS10-◇
AZ46M□D-TS20-◇
AZ46M□D-TS30-◇
AZ66M□D-TS3.6-◇
AZ66M□D-TS7.2-◇
AZ66M□D-TS10-◇
AZ66M□D-TS20-◇
AZ66M□D-TS30-◇
AZ98M□D-TS3.6-◇
AZ98M□D-TS7.2-◇
AZ98M□D-TS10-◇
AZ98M□D-TS20-◇
AZ98M□D-TS30-◇

◇**PS** Geared Type

Product Name
AZ46A□D-PS5-◇
AZ46A□D-PS7.2-◇
AZ46A□D-PS10-◇
AZ46A□D-PS25-◇
AZ46A□D-PS36-◇
AZ46A□D-PS50-◇
AZ66A□D-PS5-◇
AZ66A□D-PS7.2-◇
AZ66A□D-PS10-◇
AZ66A□D-PS25-◇
AZ66A□D-PS36-◇
AZ66A□D-PS50-◇
AZ98A□D-PS5-◇
AZ98A□D-PS7.2-◇
AZ98A□D-PS10-◇
AZ98A□D-PS25-◇
AZ98A□D-PS36-◇
AZ98A□D-PS50-◇

◇**PS** Geared Type with Electromagnetic Brake

Product Name
AZ46M□D-PS5-◇
AZ46M□D-PS7.2-◇
AZ46M□D-PS10-◇
AZ46M□D-PS25-◇
AZ46M□D-PS36-◇
AZ46M□D-PS50-◇
AZ66M□D-PS5-◇
AZ66M□D-PS7.2-◇
AZ66M□D-PS10-◇
AZ66M□D-PS25-◇
AZ66M□D-PS36-◇
AZ66M□D-PS50-◇
AZ98M□D-PS5-◇
AZ98M□D-PS7.2-◇
AZ98M□D-PS10-◇
AZ98M□D-PS25-◇
AZ98M□D-PS36-◇
AZ98M□D-PS50-◇

◇**HPG** Geared Type

Product Name
AZ46A□D-HP5-◇
AZ46A□D-HP5F-◇
AZ46A□D-HP9-◇
AZ46A□D-HP9F-◇
AZ66A□D-HP5-◇
AZ66A□D-HP5F-◇
AZ66A□D-HP15-◇
AZ66A□D-HP15F-◇
AZ98A□D-HP5-◇
AZ98A□D-HP5F-◇
AZ98A□D-HP15-◇
AZ98A□D-HP15F-◇

◇**HPG** Geared Type with Electromagnetic Brake

Product Name
AZ46M□D-HP5-◇
AZ46M□D-HP5F-◇
AZ46M□D-HP9-◇
AZ46M□D-HP9F-◇
AZ66M□D-HP5-◇
AZ66M□D-HP5F-◇
AZ66M□D-HP15-◇
AZ66M□D-HP15F-◇
AZ98M□D-HP5-◇
AZ98M□D-HP5F-◇
AZ98M□D-HP15-◇
AZ98M□D-HP15F-◇

◇Harmonic Geared Type

Product Name
AZ46A□D-HS50-◇
AZ46A□D-HS100-◇
AZ66A□D-HS50-◇
AZ66A□D-HS100-◇
AZ98A□D-HS50-◇
AZ98A□D-HS100-◇

◇Harmonic Geared Type with Electromagnetic Brake

Product Name
AZ46M□D-HS50-◇
AZ46M□D-HS100-◇
AZ66M□D-HS50-◇
AZ66M□D-HS100-◇
AZ98M□D-HS50-◇
AZ98M□D-HS100-◇

- Either **A** (single-phase 100-120 VAC) or **C** (single-phase/three-phase 200-240 VAC) indicating power supply input is entered where the box □ is located within the product name.
  A number indicating the desired length of **1** (1 m), **2** (2 m) or **3** (3 m) is entered where the box ◇ is located within the product name when the cable is included with the product.

The following items are included in each product.
Motor, Parallel Key*1, Motor Installation Screws *2, Driver, Cable for Motor*3, Cable for Encoder*3, Cable for Electromagnetic Brake (units with electromagnetic brake only) *3, Driver Connector Set and Operating Manual
*1 Only for products with a key slot on the output shaft.
*2 **TS** geared type with frame sizes 60 mm and 90 mm only.
*3 Only products where connection cables are included. Accessory cables (sold separately) must be purchased in the following situations:
· When using a flexible cable
· When using a cable longer than 3 m
· When purchasing a product to without cable

Notes
- The motor cable and electromagnetic brake cable from the motor cannot be connected directly to the driver. When connecting to a driver, use the accessory connection cable (sold separately) or use the included connection cable.

●Pulse-Input Type

◇Standard Type

Product Name
AZ46A□-◇
AZ66A□-◇
AZ69A□-◇
AZ98A□-◇
AZ911A□-◇

◇**TS** Geared Type

Product Name
AZ46A□-TS3.6-◇
AZ46A□-TS7.2-◇
AZ46A□-TS10-◇
AZ46A□-TS20-◇
AZ46A□-TS30-◇
AZ66A□-TS3.6-◇
AZ66A□-TS7.2-◇
AZ66A□-TS10-◇
AZ66A□-TS20-◇
AZ66A□-TS30-◇
AZ98A□-TS3.6-◇
AZ98A□-TS7.2-◇
AZ98A□-TS10-◇
AZ98A□-TS20-◇
AZ98A□-TS30-◇

◇**PS** Geared Type

Product Name
AZ46A□-PS5-◇
AZ46A□-PS7.2-◇
AZ46A□-PS10-◇
AZ46A□-PS25-◇
AZ46A□-PS36-◇
AZ46A□-PS50-◇
AZ66A□-PS5-◇
AZ66A□-PS7.2-◇
AZ66A□-PS10-◇
AZ66A□-PS25-◇
AZ66A□-PS36-◇
AZ66A□-PS50-◇
AZ98A□-PS5-◇
AZ98A□-PS7.2-◇
AZ98A□-PS10-◇
AZ98A□-PS25-◇
AZ98A□-PS36-◇
AZ98A□-PS50-◇

◇Standard Type with Electromagnetic Brake

Product Name
AZ46M□-◇
AZ66M□-◇
AZ69M□-◇
AZ98M□-◇

◇**TS** Geared Type with Electromagnetic Brake

Product Name
AZ46M□-TS3.6-◇
AZ46M□-TS7.2-◇
AZ46M□-TS10-◇
AZ46M□-TS20-◇
AZ46M□-TS30-◇
AZ66M□-TS3.6-◇
AZ66M□-TS7.2-◇
AZ66M□-TS10-◇
AZ66M□-TS20-◇
AZ66M□-TS30-◇
AZ98M□-TS3.6-◇
AZ98M□-TS7.2-◇
AZ98M□-TS10-◇
AZ98M□-TS20-◇
AZ98M□-TS30-◇

◇**PS** Geared Type with Electromagnetic Brake

Product Name
AZ46M□-PS5-◇
AZ46M□-PS7.2-◇
AZ46M□-PS10-◇
AZ46M□-PS25-◇
AZ46M□-PS36-◇
AZ46M□-PS50-◇
AZ66M□-PS5-◇
AZ66M□-PS7.2-◇
AZ66M□-PS10-◇
AZ66M□-PS25-◇
AZ66M□-PS36-◇
AZ66M□-PS50-◇
AZ98M□-PS5-◇
AZ98M□-PS7.2-◇
AZ98M□-PS10-◇
AZ98M□-PS25-◇
AZ98M□-PS36-◇
AZ98M□-PS50-◇

◇HPG Geared Type

Product Name
AZ46A□-HP5-◇
AZ46A□-HP5F-◇
AZ46A□-HP9-◇
AZ46A□-HP9F-◇
AZ66A□-HP5-◇
AZ66A□-HP5F-◇
AZ66A□-HP15-◇
AZ66A□-HP15F-◇
AZ98A□-HP5-◇
AZ98A□-HP5F-◇
AZ98A□-HP15-◇
AZ98A□-HP15F-◇

◇HPG Geared Type with Electromagnetic Brake

Product Name
AZ46M□-HP5-◇
AZ46M□-HP5F-◇
AZ46M□-HP9-◇
AZ46M□-HP9F-◇
AZ66M□-HP5-◇
AZ66M□-HP5F-◇
AZ66M□-HP15-◇
AZ66M□-HP15F-◇
AZ98M□-HP5-◇
AZ98M□-HP5F-◇
AZ98M□-HP15-◇
AZ98M□-HP15F-◇

◇Harmonic Geared Type

Product Name
AZ46A□-HS50-◇
AZ46A□-HS100-◇
AZ66A□-HS50-◇
AZ66A□-HS100-◇
AZ98A□-HS50-◇
AZ98A□-HS100-◇

◇Harmonic Geared Type with Electromagnetic Brake

Product Name
AZ46M□-HS50-◇
AZ46M□-HS100-◇
AZ66M□-HS50-◇
AZ66M□-HS100-◇
AZ98M□-HS50-◇
AZ98M□-HS100-◇

- Either **A** (single-phase 100-120 VAC) or **C** (single-phase/three-phase 200-240 VAC) indicating power supply input is entered where the box □ is located within the product name.
  A number indicating the desired length of **1** (1 m), **2** (2 m) or **3** (3 m) is entered where the box ◇ is located within the product name when the cable is included with the product.

The following items are included in each product.

Motor, Parallel Key*1, Motor Installation Screws *2, Driver, Cable for Motor*3, Cable for Encoder*3, Cable for Electromagnetic Brake (units with electromagnetic brake only) *3, Driver Connector Set and Operating Manual

*1 Only for products with a key slot on the output shaft.

*2 **TS** geared type with frame sizes 60 mm and 90 mm only.

*3 Only products where connection cables are included. Accessory cables (sold separately) must be purchased in the following situations:

- When using a flexible cable
- When using a cable longer than 3 m
- When purchasing a product to without cable

Notes

- The motor cable and electromagnetic brake cable from the motor cannot be connected directly to the driver. When connecting to a driver, use the accessory connection cable (sold separately) or use the included connection cable.

How to read the specification table

Maximum Holding Torque		: This is the maximum holding torque (holding force) the motor has when power is supplied (at rated current) but the motor is not rotating. (With geared types, the value of holding torque considers the permissible strength of the gear).
Permissible torque		: This is the maximum torque value continuously applied to the gear output shaft.
Instantaneous maximum torque		: This is the maximum torque value applied to the gear output shaft when accelerating and decelerating such as when starting/stopping inertial load.
Holding torque at standstill	While power on	: This is the holding torque in the state in which the automatic current down function is working.
	Electromagnetic brakes	: Static friction torque that can be caused by the electromagnetic brakes when stopped. (Electromagnetic brakes are non-excitation actuating type.)

Standard Type Frame Size 42 mm, 60 mm, 85 mm

Specifications

Product Name			AZ46□□D-◇	AZ66□□D-◇	AZ69□□D-◇	AZ98□□D-◇	AZ911A□D-◇
	Pulse-Input Type		AZ46□□-◇	AZ66□□-◇	AZ69□□-◇	AZ98□□-◇	AZ911A□-◇
Maximum Holding Torque		N·m	0.3	1.2	2	2	4
Holding Torque at Motor Standstill		Power ON N·m	0.15	0.6	1	1	2
		Electromagnetic Brake N·m	0.15	0.6	1	1	–
Rotor Inertia		J: kg·m^2	55×10^{-7} (71×10^{-7})*1	370×10^{-7} (530×10^{-7})*1	740×10^{-7} (900×10^{-7})*1	1090×10^{-7} (1250×10^{-7}) *1	2200×10^{-7}
Resolution		Resolution Setting: 1000P/R	0.36°/Pulse				
Power Supply Input	Voltage/Frequency		Single-Phase 100-120 VAC, Single-Phase/Three-Phase 200-240 VAC −15～+6% 50/60 Hz				
	Input current A	Single-Phase 100–120 VAC	2.7	3.8	5.4	5.5	6.4
		Single Phase 200–240 VAC	1.7	2.3	3.3	3.3	3.9
		Three Phase 200–240 VAC	1.0	1.4	2.0	2.0	2.3
Control Power Supply			24 VDC ±5%*2 0.25 A (0.33 A)*1	24 VDC ±5%*2 0.25 A (0.5 A)*1			

Either **A** (single shaft) or **M** (electromagnetic brake) indicating the configuration is entered where the box □ is located within the product name.
Either **A** (single-phase 100-120 VAC) or **C** (single-phase/three-phase 200-240 VAC) indicating the power supply input is entered where the box ■ is located within the product name.
A number indicating the desired length of **1** (1 m), **2** (2 m) or **3** (3 m) is entered where the box ◇ is located within the product name when the cable is included with the product.

*1 The values inside the brackets ( ) represent the specification for the electromagnetic brake type.
*2 If the wiring distance between the electromagnetic brake type motor and driver is extended to 20 m using an accessory cable (sold separately), the 24 VDC± 4% specification applies.

Speed - Torque Characteristics (Reference Value)

AZ46

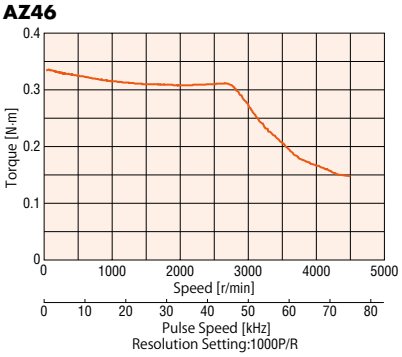

AZ66

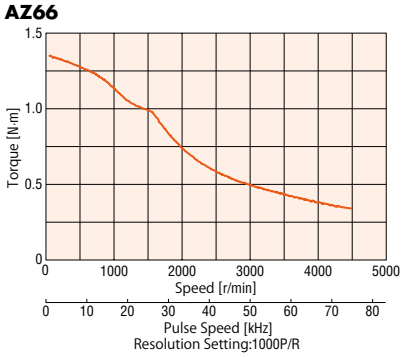

AZ69

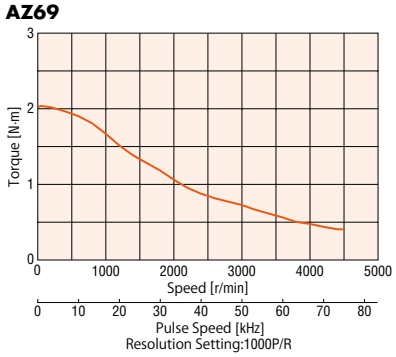

AZ98

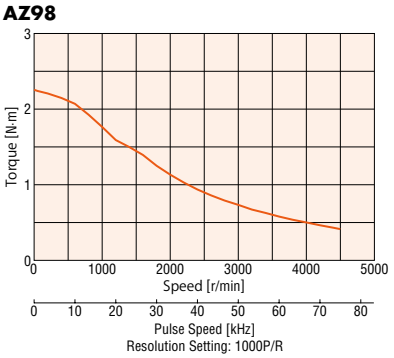

AZ911

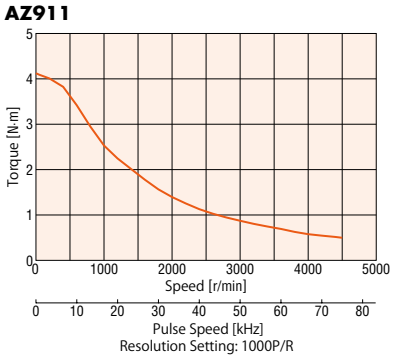

Notes

- The speed-torque characteristics are data based upon our measurement conditions. When these conditions change, these characteristics may change.
- Depending on the driving conditions, a considerable amount of heat may be generated by the motor. Be sure to keep the motor case temperature at 80°C or less in order to protect the ABZO sensor. (When conforming to the UL standards, it is required to keep the temperature of the motor case at 75°C or less, since the motor is recognized as thermal class A.)

TS Geared Type Frame Size 42 mm

Specifications

Product Name							
Built-in Controller Type			AZ46□□D-TS3.6-◇	AZ46□□D-TS7.2-◇	AZ46□□D-TS10-◇	AZ46□□D-TS20-◇	AZ46□□D-TS30-◇
Pulse-Input Type			AZ46□□-TS3.6-◇	AZ46□□-TS7.2-◇	AZ46□□-TS10-◇	AZ46□□-TS20-◇	AZ46□□-TS30-◇
Maximum Holding Torque		N·m	0.65	1.2	1.7	2	2.3
Rotor Inertia		J: kg·m^2	55×10^{-7} (71×10^{-7})*1				
Gear Ratio			3.6	7.2	10	20	30
Resolution	Resolution Setting: 1000P/R		0.1°/Pulse	0.05°/Pulse	0.036°/Pulse	0.018°/Pulse	0.012°/Pulse
Permissible Torque		N·m	0.65	1.2	1.7	2	2.3
Instantaneous Maximum Torque		N·m	0.85	1.6	2	3	
Holding Torque at Motor Standstill	Power ON	N·m	0.54	1	1.5	1.9	2.2
	Electromagnetic Brake	N·m	0.54	1	1.5	1.9	2.2
Speed Range		r/min	0~833	0~416	0~300	0~150	0~100
Backlash		arcmin	45 (0.75°)	25 (0.42°)		15 (0.25°)	
Power Supply Input	Voltage/Frequency		Single-Phase 100-120 VAC, Single-Phase/Three-Phase 200-240 VAC −15~+6% 50/60 Hz				
	Input current A	Single-Phase 100-120 VAC	2.7				
		Single Phase 200–240 VAC	1.7				
		Three Phase 200–240 VAC	1.0				
Control Power Supply			24 VDC ±5%*2 0.25 A (0.33 A)*1				

Either **A** (single shaft) or **M** (electromagnetic brake) indicating the configuration is entered where the box □ is located within the product name.
Either **A** (single-phase 100-120 VAC) or **C** (single-phase/three-phase 200-240 VAC) indicating the power supply input is entered where the box ■ is located within the product name.
A number indicating the desired length of **1** (1 m), **2** (2 m) or **3** (3 m) is entered where the box ◇ is located within the product name when the cable is included with the product.

- Check the website for detailed information on the specification.

*1 The values inside the brackets ( ) represent the specification for the electromagnetic brake type.
*2 If the wiring distance between the electromagnetic brake type motor and driver is extended to 20 m using an accessory cable (sold separately), the 24 VDC± 4% specification applies.

Speed - Torque Characteristics (Reference Value)

AZ46 Gear Ratio **3.6**

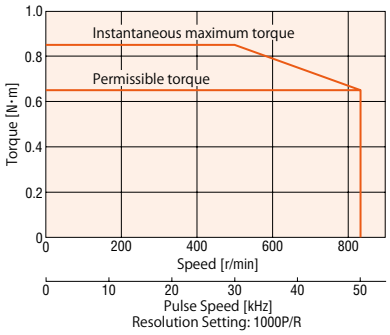

AZ46 Gear Ratio **7.2**

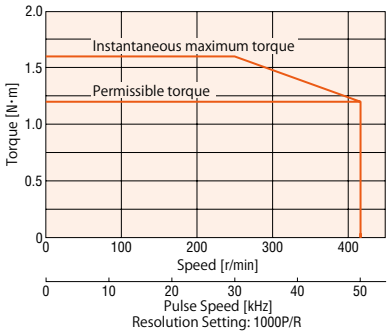

AZ46 Gear Ratio **10**

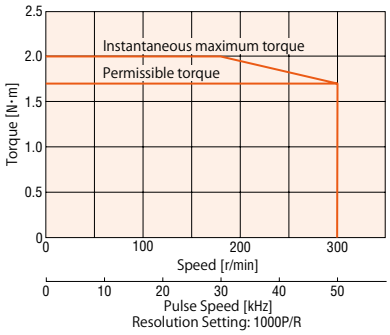

AZ46 Gear Ratio **20**

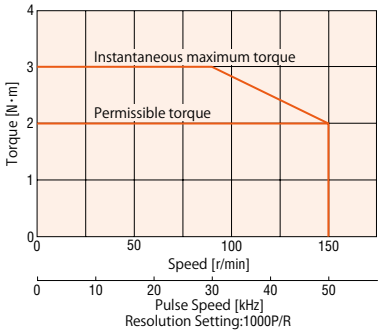

AZ46 Gear Ratio **30**

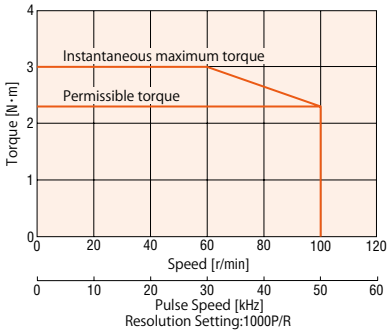

Notes

- The speed-torque characteristics are data based upon our measurement conditions. When these conditions change, these characteristics may change.
- Depending on the driving conditions, a considerable amount of heat may be generated by the motor. Be sure to keep the motor case temperature at 80°C or less in order to protect the ABZO sensor. (When conforming to the UL standards, it is required to keep the temperature of the motor case at 75°C or less, since the motor is recognized as thermal class A.)

TS Geared Type Frame Size 60 mm

Specifications

Product Name							
	Built-in Controller Type		AZ66□□D-TS3.6-◇	AZ66□□D-TS7.2-◇	AZ66□□D-TS10-◇	AZ66□□D-TS20-◇	AZ66□□D-TS30-◇
	Pulse-Input Type		AZ66□□-TS3.6-◇	AZ66□□-TS7.2-◇	AZ66□□-TS10-◇	AZ66□□-TS20-◇	AZ66□□-TS30-◇
Maximum Holding Torque		N·m	1.8	3	4	5	6
Rotor Inertia		J: kg·m^2	370×10^{-7} (530×10^{-7})*1				
Gear Ratio			3.6	7.2	10	20	30
Resolution	Resolution Setting: 1000P/R		0.1°/Pulse	0.05°/Pulse	0.036°/Pulse	0.018°/Pulse	0.012°/Pulse
Permissible Torque		N·m	1.8	3	4	5	6
Instantaneous Maximum Torque*		N·m	*	4.5	6	8	10
Holding Torque at Motor Standstill	Power ON	N·m	1.3	2.6	3.7	5	6
	Electromagnetic Brake	N·m	1.3	2.6	3.7	5	6
Speed Range		r/min	0~833	0~416	0~300	0~150	0~100
Backlash		arcmin	35 (0.59°)	15 (0.25°)		10 (0.17°)	
Power Supply Input	Voltage/Frequency		Single-Phase 100-120 VAC, Single-Phase/Three-Phase 200-240 VAC −15~+6% 50/60 Hz				
	Input current A	Single-Phase 100-120 VAC	3.8				
		Single Phase 200–240 VAC	2.3				
		Three Phase 200–240 VAC	1.4				
Control Power Supply			24 VDC ±5%*2 0.25 A (0.5 A)*1				

*For the output torque as a geared motor, see the speed-torque characteristics.

- Either **A** (single shaft) or **M** (electromagnetic brake) indicating the configuration is entered where the box □ is located within the product name.
  Either **A** (single-phase 100-120 VAC) or **C** (single-phase/three-phase 200-240 VAC) indicating the power supply input is entered where the box □ is located within the product name.
  A number indicating the desired length of **1** (1 m), **2** (2 m) or **3** (3 m) is entered where the box ◇ is located within the product name when the cable is included with the product.
- Check the website for detailed information on the specification.

*1 The values inside the brackets ( ) represent the specification for the electromagnetic brake type.

*2 If the wiring distance between the electromagnetic brake type motor and driver is extended to 20 m using an accessory cable (sold separately), the 24 VDC± 4% specification applies.

Speed - Torque Characteristics (Reference Value)

AZ66 Gear Ratio **3.6**

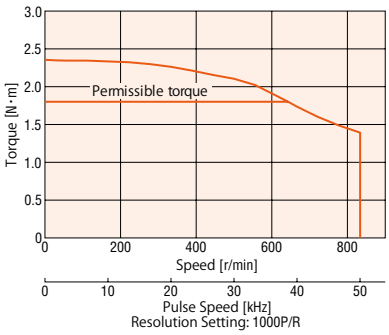

AZ66 Gear Ratio **7.2**

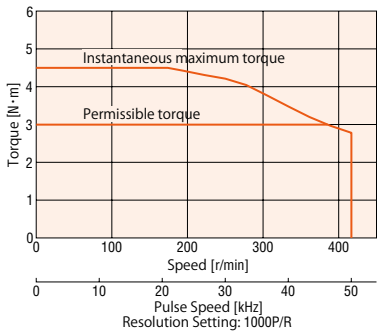

AZ66 Gear Ratio **10**

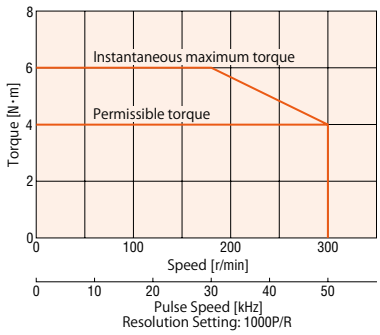

AZ66 Gear Ratio **20**

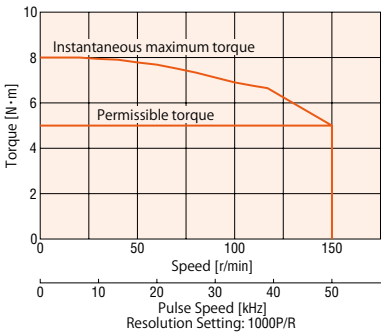

AZ66 Gear Ratio **30**

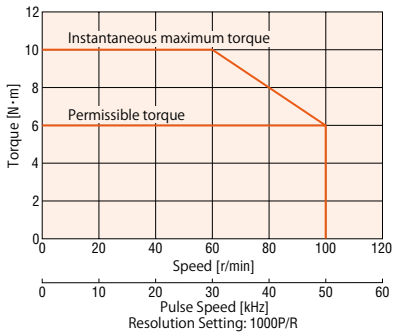

Notes

- The speed-torque characteristics are data based upon our measurement conditions. When these conditions change, these characteristics may change.
- Depending on the driving conditions, a considerable amount of heat may be generated by the motor. Be sure to keep the motor case temperature at 80°C or less in order to protect the ABZO sensor. (When conforming to the UL standards, it is required to keep the temperature of the motor case at 75°C or less, since the motor is recognized as thermal class A.)

TS Geared Type Frame Size 90 mm

Specifications

Product Name							
	Built-in Controller Type		AZ98□□D-TS3.6-◇	AZ98□□D-TS7.2-◇	AZ98□□D-TS10-◇	AZ98□□D-TS20-◇	AZ98□□D-TS30-◇
	Pulse-Input Type		AZ98□□-TS3.6-◇	AZ98□□-TS7.2-◇	AZ98□□-TS10-◇	AZ98□□-TS20-◇	AZ98□□-TS30-◇
Maximum Holding Torque		N·m	6	10	14	20	25
Rotor Inertia		J: kg·m^2	1090×10^{-7} (1250×10^{-7})*1				
Gear Ratio			3.6	7.2	10	20	30
Resolution	Resolution Setting: 1000P/R		0.1°/Pulse	0.05°/Pulse	0.036°/Pulse	0.018°/Pulse	0.012°/Pulse
Permissible Torque		N·m	6	10	14	20	25
Instantaneous Maximum Torque*		N·m	*	*	20	*	45
Holding Torque at Motor Standstill	Power ON	N·m	3.6	7.2	10	20	25
	Electromagnetic Brake	N·m	3.6	7.2	10	20	25
Speed Range		r/min	0~833	0~416	0~300	0~150	0~100
Backlash		arcmin	25 (0.42°)	15 (0.25°)		10 (0.17°)	
Power Supply Input	Voltage/Frequency		Single-Phase 100-120 VAC, Single-Phase/Three-Phase 200-240 VAC −15~+6% 50/60 Hz				
	Input current A	Single-Phase 100-120 VAC	5.5				
		Single Phase 200–240 VAC	3.3				
		Three Phase 200–240 VAC	2.0				
Control Power Supply			24 VDC ±5%*2 0.25 A (0.5 A)*1				

*For the output torque as a geared motor, see the speed-torque characteristics.
Either **A** (single shaft) or **M** (electromagnetic brake) indicating the configuration is entered where the box □ is located within the product name.
Either **A** (single-phase 100-120 VAC) or **C** (single-phase/three-phase 200-240 VAC) indicating the power supply input is entered where the box □ is located within the product name.
A number indicating the desired length of **1** (1 m), **2** (2 m) or **3** (3 m) is entered where the box ◇ is located within the product name when the cable is included with the product.
● Check the website for detailed information on the specification.
*1 The values inside the brackets ( ) represent the specification for the electromagnetic brake type.
*2 If the wiring distance between the electromagnetic brake type motor and driver is extended to 20 m using an accessory cable (sold separately), the 24 VDC± 4% specification applies.

Speed - Torque Characteristics (Reference Value)

AZ98 Gear Ratio **3.6**

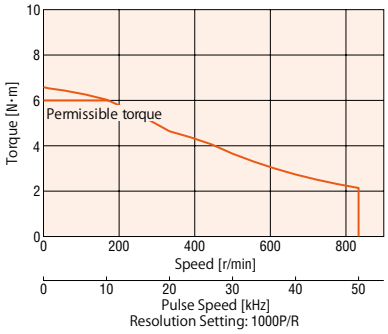

AZ98 Gear Ratio **7.2**

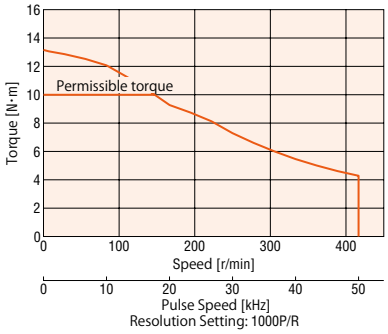

AZ98 Gear Ratio **10**

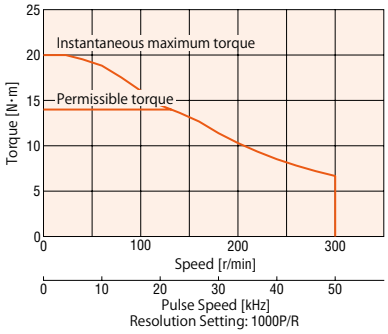

AZ98 Gear Ratio **20**

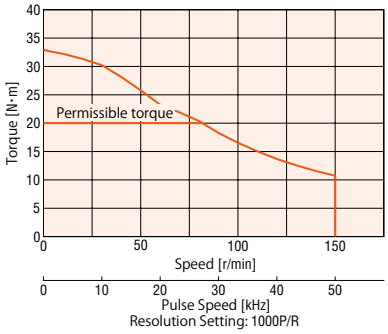

AZ98 Gear Ratio **30**

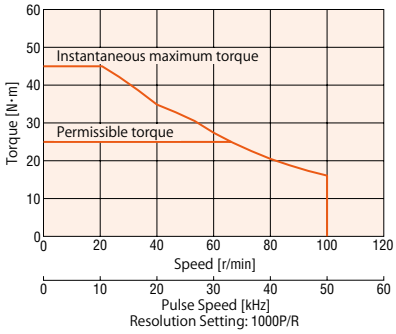

Notes
● The speed-torque characteristics are data based upon our measurement conditions. When these conditions change, these characteristics may change.
● Depending on the driving conditions, a considerable amount of heat may be generated by the motor. Be sure to keep the motor case temperature at 80°C or less in order to protect the ABZO sensor. (When conforming to the UL standards, it is required to keep the temperature of the motor case at 75°C or less, since the motor is recognized as thermal class A.)

PS Geared Type Frame Size 42 mm

Specifications

Product Name								
Built-in Controller Type			AZ46□□D-PS5-◇	AZ46□□D-PS7.2-◇	AZ46□□D-PS10-◇	AZ46□□D-PS25-◇	AZ46□□D-PS36-◇	AZ46□□D-PS50-◇
Pulse-Input Type			AZ46□□-PS5-◇	AZ46□□-PS7.2-◇	AZ46□□-PS10-◇	AZ46□□-PS25-◇	AZ46□□-PS36-◇	AZ46□□-PS50-◇
Maximum Holding Torque		N·m	1	1.5		2.5	3	
Rotor Inertia		J: kg·m^2	55×10^{-7} (71×10^{-7})*1					
Gear Ratio			5	7.2	10	25	36	50
Resolution	Resolution Setting: 1000P/R		0.072°/Pulse	0.05°/Pulse	0.036°/Pulse	0.0144°/Pulse	0.01°/Pulse	0.0072°/Pulse
Permissible Torque		N·m	1	1.5		2.5	3	
Instantaneous Maximum Torque		N·m	1.5	2		6		
Holding Torque at Motor Standstill	Power ON	N·m	0.75	1	1.5	2.5	3	
	Electromagnetic Brake	N·m	0.75	1	1.5	2.5	3	
Speed Range		r/min	0~600	0~416	0~300	0~120	0~83	0~60
Backlash		arcmin	15 (0.25°)					
Power Supply Input	Voltage/Frequency		Single-Phase 100-120 VAC, Single-Phase/Three-Phase 200-240 VAC −15~+6% 50/60 Hz					
	Input current A	Single-Phase 100-120 VAC	2.7					
		Single Phase 200–240 VAC	1.7					
		Three Phase 200–240 VAC	1.0					
Control Power Supply			24 VDC ±5%*2 0.25 A (0.33 A)*1					

- Either **A** (single shaft) or **M** (electromagnetic brake) indicating the configuration is entered where the box □ is located within the product name.
  Either **A** (single-phase 100-120 VAC) or **C** (single-phase/three-phase 200-240 VAC) indicating the power supply input is entered where the box □ is located within the product name.
  A number indicating the desired length of **1** (1 m), **2** (2 m) or **3** (3 m) is entered where the box ◇ is located within the product name when the cable is included with the product.
- Check the website for detailed information on the specification.

*1 The values inside the brackets ( ) represent the specification for the electromagnetic brake type.
*2 If the wiring distance between the electromagnetic brake type motor and driver is extended to 20 m using an accessory cable (sold separately), the 24 VDC± 4% specification applies.

Speed - Torque Characteristics (Reference Value)

AZ46 Gear Ratio **5**

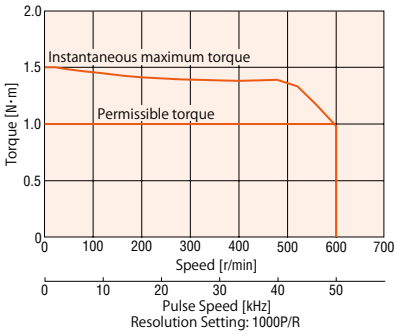

AZ46 Gear Ratio **7.2**

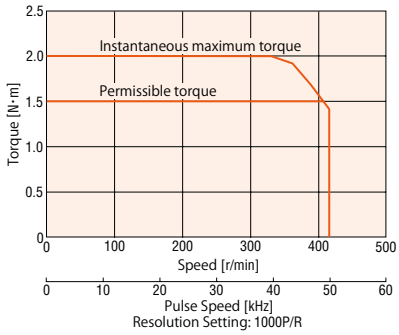

AZ46 Gear Ratio **10**

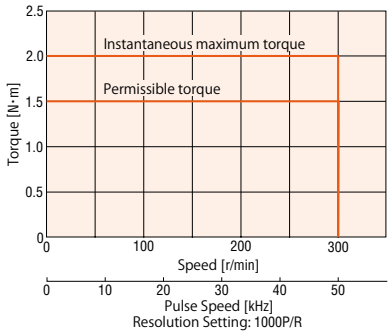

AZ46 Gear Ratio **25**

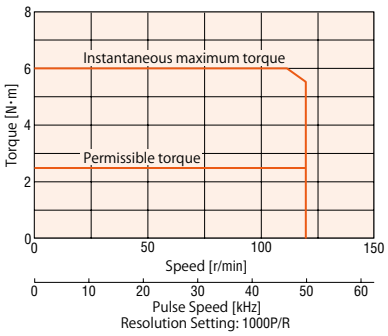

AZ46 Gear Ratio **36**

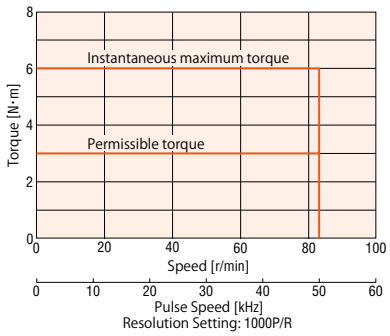

AZ46 Gear Ratio **50**

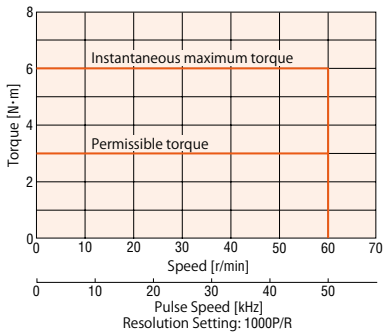

Notes

- The speed-torque characteristics are data based upon our measurement conditions. When these conditions change, these characteristics may change.
- Depending on the driving conditions, a considerable amount of heat may be generated by the motor. Be sure to keep the motor case temperature at 80°C or less in order to protect the ABZO sensor. (When conforming to the UL standards, it is required to keep the temperature of the motor case at 75°C or less, since the motor is recognized as thermal class A.)

PS Geared Type Frame Size 60 mm

Specifications

Product Name								
	Built-in Controller Type		AZ66□□D-PS5-◇	AZ66□□D-PS7.2-◇	AZ66□□D-PS10-◇	AZ66□□D-PS25-◇	AZ66□□D-PS36-◇	AZ66□□D-PS50-◇
	Pulse-Input Type		AZ66□□-PS5-◇	AZ66□□-PS7.2-◇	AZ66□□-PS10-◇	AZ66□□-PS25-◇	AZ66□□-PS36-◇	AZ66□□-PS50-◇
Maximum Holding Torque		N·m	3.5	4	5	8		
Rotor Inertia		J: kg·m^2	370×10^{-7} (530×10^{-7})*1					
Gear Ratio			5	7.2	10	25	36	50
Resolution	Resolution Setting: 1000P/R		0.072°/Pulse	0.05°/Pulse	0.036°/Pulse	0.0144°/Pulse	0.01°/Pulse	0.0072°/Pulse
Permissible Torque		N·m	3.5	4	5	8		
Instantaneous Maximum Torque*		N·m	*	*	11	16	20	
Holding Torque at Motor Standstill	Power ON	N·m	3	4	5	8		
	Electromagnetic Brake	N·m	3	4	5	8		
Speed Range		r/min	0~600	0~416	0~300	0~120	0~83	0~60
Backlash		arcmin	7 (0.12°)			9 (0.15°)		
Power Supply Input	Voltage/Frequency		Single-Phase 100-120 VAC, Single-Phase/Three-Phase 200-240 VAC −15~+6% 50/60 Hz					
	Input current A	Single-Phase 100-120 VAC	3.8					
		Single Phase 200–240 VAC	2.3					
		Three Phase 200–240 VAC	1.4					
Control Power Supply			24 VDC ±5%*2 0.25 A (0.5 A)*1					

*For the output torque as a geared motor, see the speed-torque characteristics.
Either **A** (single shaft) or **M** (electromagnetic brake) indicating the configuration is entered where the box □ is located within the product name.
Either **A** (single-phase 100-120 VAC) or **C** (single-phase/three-phase 200-240 VAC) indicating the power supply input is entered where the box □ is located within the product name.
A number indicating the desired length of **1** (1 m), **2** (2 m) or **3** (3 m) is entered where the box ◇ is located within the product name when the cable is included with the product.
● Check the website for detailed information on the specification.
*1 The values inside the brackets ( ) represent the specification for the electromagnetic brake type.
*2 If the wiring distance between the electromagnetic brake type motor and driver is extended to 20 m using an accessory cable (sold separately), the 24 VDC± 4% specification applies.

Speed - Torque Characteristics (Reference Value)

AZ66 Gear Ratio **5**

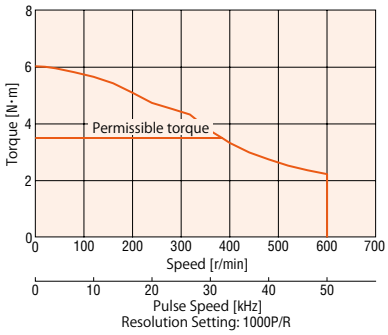

AZ66 Gear Ratio **7.2**

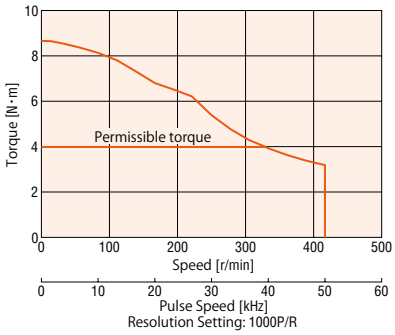

AZ66 Gear Ratio **10**

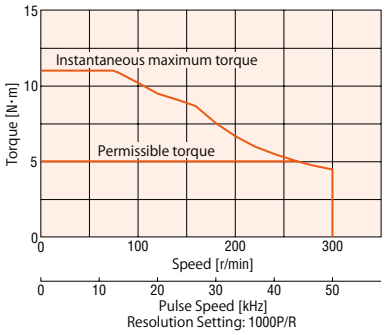

AZ66 Gear Ratio **25**

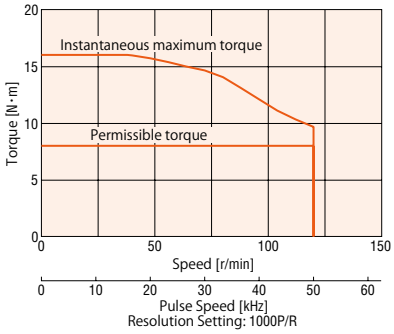

AZ66 Gear Ratio **36**

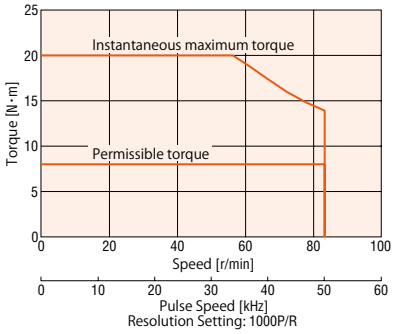

AZ66 Gear Ratio **50**

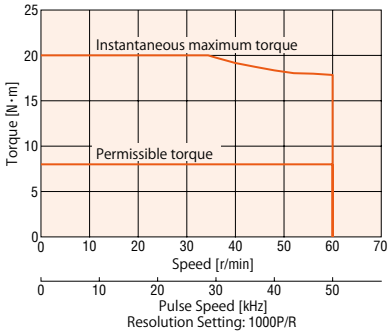

Notes

● The speed-torque characteristics are data based upon our measurement conditions. When these conditions change, these characteristics may change.
● Depending on the driving conditions, a considerable amount of heat may be generated by the motor. Be sure to keep the motor case temperature at 80°C or less in order to protect the ABZO sensor. (When conforming to the UL standards, it is required to keep the temperature of the motor case at 75°C or less, since the motor is recognized as thermal class A.)

PS Geared Type Frame Size 90 mm

Specifications

Product Name								
	Built-in Controller Type		AZ98□□D-PS5-◇	AZ98□□D-PS7.2-◇	AZ98□□D-PS10-◇	AZ98□□D-PS25-◇	AZ98□□D-PS36-◇	AZ98□□D-PS50-◇
	Pulse-Input Type		AZ98□□-PS5-◇	AZ98□□-PS7.2-◇	AZ98□□-PS10-◇	AZ98□□-PS25-◇	AZ98□□-PS36-◇	AZ98□□-PS50-◇
Maximum Holding Torque		N·m	10	14	20	37		
Rotor Inertia		J: kg·m^2	1090×10^{-7} (1250×10^{-7})*1					
Gear Ratio			5	7.2	10	25	36	50
Resolution	Resolution Setting: 1000P/R		0.072°/Pulse	0.05°/Pulse	0.036°/Pulse	0.0144°/Pulse	0.01°/Pulse	0.0072°/Pulse
Permissible Torque*		N·m	*	*	20	37		
Instantaneous Maximum Torque*		N·m	*	*	*	*	60	
Holding Torque at Motor Standstill	Power ON	N·m	5	7.2	10	25	36	37
	Electromagnetic Brake	N·m	5	7.2	10	25	36	37
Speed Range		r/min	0~600	0~416	0~300	0~120	0~83	0~60
Backlash		arcmin	7 (0.12°)			9 (0.15°)		
Power Supply Input	Voltage/Frequency		Single-Phase 100-120 VAC, Single-Phase/Three-Phase 200-240 VAC −15~+6% 50/60 Hz					
	Input current A	Single-Phase 100-120 VAC	5.5					
		Single Phase 200–240 VAC	3.3					
		Three Phase 200–240 VAC	2.0					
Control Power Supply			24 VDC ±5%*2 0.25 A (0.5 A)*1					

*For the output torque as a geared motor, see the speed-torque characteristics.
Either **A** (single shaft) or **M** (electromagnetic brake) indicating the configuration is entered where the box □ is located within the product name.
Either **A** (single-phase 100-120 VAC) or **C** (single-phase/three-phase 200-240 VAC) indicating the power supply input is entered where the box ■ is located within the product name.
A number indicating the desired length of **1** (1 m), **2** (2 m) or **3** (3 m) is entered where the box ◇ is located within the product name when the cable is included with the product.
● Check the website for detailed information on the specification.
*1 The values inside the brackets ( ) represent the specification for the electromagnetic brake type.
*2 If the wiring distance between the electromagnetic brake type motor and driver is extended to 20 m using an accessory cable (sold separately), the 24 VDC± 4% specification applies.

Speed - Torque Characteristics (Reference Value)

AZ98 Gear Ratio **5**

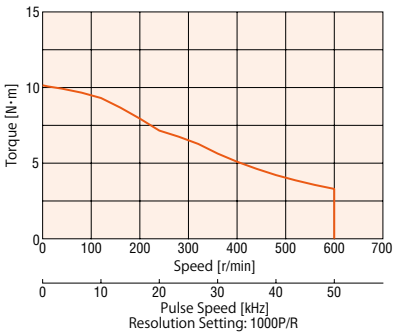

AZ98 Gear Ratio **7.2**

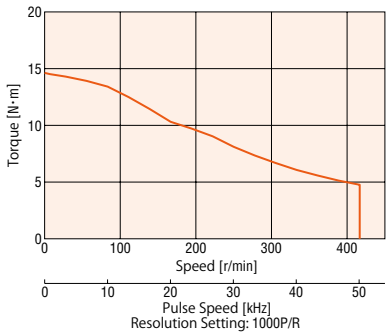

AZ98 Gear Ratio **10**

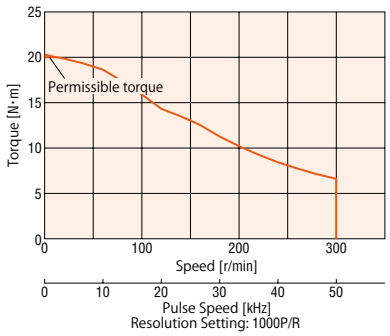

AZ98 Gear Ratio **25**

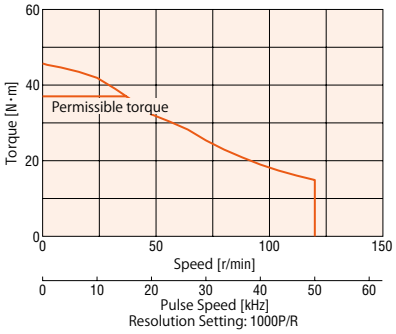

AZ98 Gear Ratio **36**

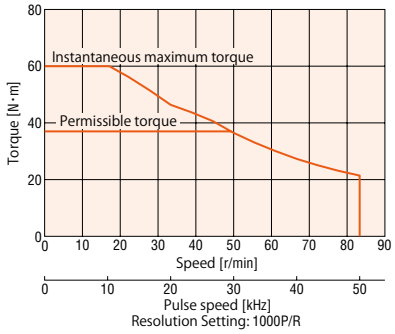

AZ98 Gear Ratio **50**

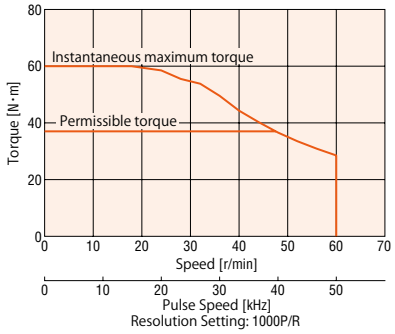

Notes
● The speed-torque characteristics are data based upon our measurement conditions. When these conditions change, these characteristics may change.
● Depending on the driving conditions, a considerable amount of heat may be generated by the motor. Be sure to keep the motor case temperature at 80°C or less in order to protect the ABZO sensor. (When conforming to the UL standards, it is required to keep the temperature of the motor case at 75°C or less, since the motor is recognized as thermal class A.)

HPG Geared Type Frame Size 40 mm, 60 mm, 90 mm

Specifications

Product Name								
	Built-in Controller Type		AZ46□□D-HP5■-◇	AZ46□□D-HP9■-◇	AZ66□□D-HP5■-◇	AZ66□□D-HP15■-◇	AZ98□□D-HP5■-◇	AZ98□□D-HP15■-◇
	Pulse-Input Type		AZ46□□-HP5■-◇	AZ46□□-HP9■-◇	AZ66□□-HP5■-◇	AZ66□□-HP15■-◇	AZ98□□-HP5■-◇	AZ98□□-HP15■-◇
Maximum Holding Torque		N·m	1.5	2.5	5.9	9	10	24
Rotor Inertia		J: kg·m^2	55×10^{-7} (71×10^{-7})*1		370×10^{-7} (530×10^{-7})*1		1090×10^{-7} (1250×10^{-7})*1	
Inertia moment*2		J: kg·m^2	5.8×10^{-7} (4.2×10^{-7})	3.4×10^{-7} (2.9×10^{-7})	92×10^{-7} (86×10^{-7})	78×10^{-7} (77×10^{-7})	629×10^{-7} (589×10^{-7})	488×10^{-7} (488×10^{-7})
Gear Ratio			5	9	5	15	5	15
Resolution	Resolution Setting: 1000P/R		0.072°/Pulse	0.04°/Pulse	0.072°/Pulse	0.024°/Pulse	0.072°/Pulse	0.024°/Pulse
Permissible Torque*		N·m	*	2.5	5.9	9	*	24
Instantaneous Maximum Torque*		N·m	*	*	*	*	*	*
Holding Torque at Motor Standstill	Power ON	N·m	0.75	1.35	3	9	5	15
	Electromagnetic Brake	N·m	0.75	1.35	3	9	5	15
Speed Range		r/min	0~900	0~500	0~900	0~300	0~900	0~300
Backlash		arcmin	3 (0.05°)					
Power Supply Input	Voltage/Frequency		Single-Phase 100-120 VAC, Single-Phase/Three-Phase 200-240 VAC −15~+6% 50/60 Hz					
	Input current A	Single-Phase 100-120 VAC	2.7		3.8		5.5	
		Single Phase 200–240 VAC	1.7		2.3		3.3	
		Three Phase 200–240 VAC	1.0		1.4		2.0	
Control Power Supply			24 VDC ±5%*4 0.25 A (0.33 A)*1		24 VDC ±5%*4 0.25 A (0.5 A)*1			
Output flange face runout*3		mm	0.02					
Output flange inner diameter runout*3		mm	0.03		0.04			

*For the output torque as a geared motor, see the speed-torque characteristics.
Either **A** (single shaft) or **M** (electromagnetic brake) indicating the configuration is entered where the box □ is located within the product name.
Either **A** (single-phase 100-120 VAC) or **C** (single-phase/three-phase 200-240 VAC) indicating the power supply input is entered where the box □ is located within the product name.
The ■ within the product name includes **F** in the case of flange output type.
A number indicating the desired length of **1** (1 m), **2** (2 m) or **3** (3 m) is entered where the box ◇ is located within the product name when the cable is included with the product.

● Check the website for detaiwled information on the specification.

*1 The values inside the brackets ( ) represent the specification for the electromagnetic brake type.

*2 This is the value with the inertia moment inside the gear section converted into the motor shaft. The value within ( ) is the flange output type.

*3 This is the flange output type specification.

*4 If the wiring distance between the electromagnetic brake type motor and driver is extended to 20 m using an accessory cable (sold separately), the 24 VDC± 4% specification applies.

Speed - Torque Characteristics (Reference Value)

AZ46 Gear Ratio **5**

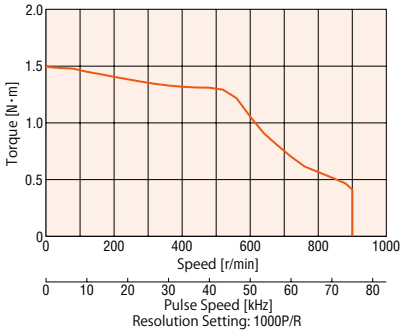

AZ66 Gear Ratio **5**

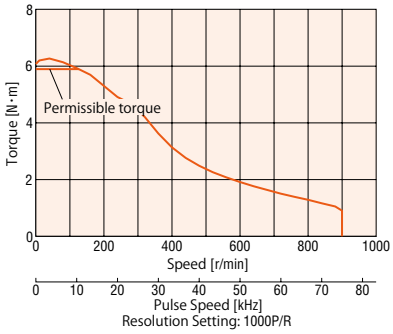

AZ98 Gear Ratio **5**

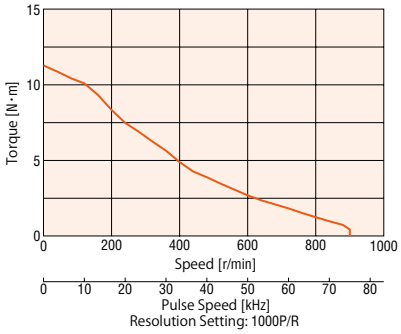

AZ46 Gear Ratio **9**

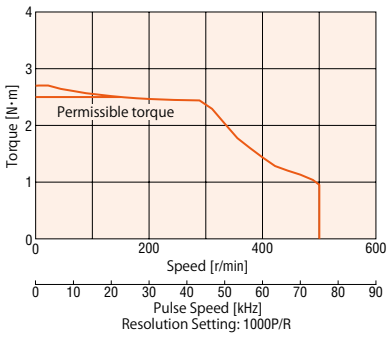

AZ66 Gear Ratio **15**

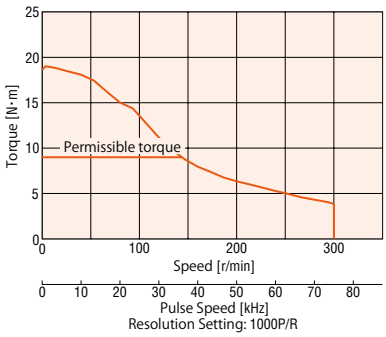

AZ98 Gear Ratio **15**

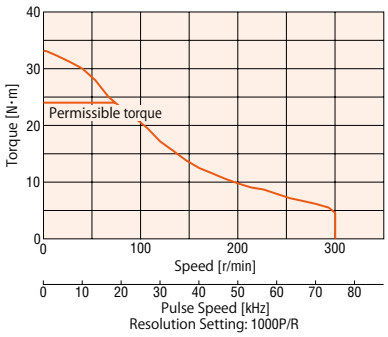

Notes

● The speed-torque characteristics are data based upon our measurement conditions. When these conditions change, these characteristics may change.

● Depending on the driving conditions, a considerable amount of heat may be generated by the motor. Be sure to keep the motor case temperature at 80°C or less in order to protect the ABZO sensor. (When conforming to the UL standards, it is required to keep the temperature of the motor case at 75°C or less, since the motor is recognized as thermal class A.)

Harmonic Geared Type Frame Size 42 mm, 60 mm, 90 mm

Specifications

Product Name								
	Built-in Controller Type		AZ46□□D-HS50-◇	AZ46□□D-HS100-◇	AZ66□□D-HS50-◇	AZ66□□D-HS100-◇	AZ98□□D-HS50-◇	AZ98□□D-HS100-◇
	Pulse-Input Type		AZ46□□-HS50-◇	AZ46□□-HS100-◇	AZ66□□-HS50-◇	AZ66□□-HS100-◇	AZ98□□-HS50-◇	AZ98□□-HS100-◇
Maximum Holding Torque		N·m	3.5	5	7	10	33	52
Rotor Inertia		J: kg·m^2	72×10^{-7} (88×10^{-7})*1		405×10^{-7} (565×10^{-7})*1		1290×10^{-7} (1450×10^{-7})*1	
Gear Ratio			50	100	50	100	50	100
Resolution	Resolution Setting:1000P/R		0.0072°/Pulse	0.0036°/Pulse	0.0072°/Pulse	0.0036°/Pulse	0.0072°/Pulse	0.0036°/Pulse
Permissible Torque		N·m	3.5	5	7	10	33	52
Instantaneous Maximum Torque*		N·m	8.3	11	23	36	*	107
Holding Torque at Motor Standstill	Power ON	N·m	3.5	5	7	10	33	52
	Electromagnetic Brake	N·m	3.5	5	7	10	33	52
Speed Range		r/min	0~70	0~35	0~70	0~35	0~70	0~35
Lost Motion (Load torque)		arcmin	1.5 or less (±0.16N·m)	1.5 or less (±0.20N·m)	0.7 or less (±0.28N·m)	0.7 or less (±0.39N·m)	0.7 or less (±1.2N·m)	
Power Supply Input	Voltage/Frequency		Single-Phase 100-120 VAC, Single-Phase/Three-Phase 200-240 VAC −15~+6% 50/60 Hz					
	Input current A	Single-Phase 100-120 VAC	2.7		3.8		5.5	
		Single Phase 200–240 VAC	1.7		2.3		3.3	
		Three Phase 200–240 VAC	1.0		1.4		2.0	
Control Power Supply			24 VDC ±5%*2 0.25 A (0.33 A)*1		24 VDC ±5%*2 0.25 A (0.5 A)*1			

*For the output torque as a geared motor, see the speed-torque characteristics.
Either **A** (single shaft) or **M** (electromagnetic brake) indicating the configuration is entered where the box □ is located within the product name.
Either **A** (single-phase 100-120 VAC) or **C** (single-phase/three-phase 200-240 VAC) indicating the power supply input is entered where the box □ is located within the product name.
A number indicating the desired length of **1** (1 m), **2** (2 m) or **3** (3 m) is entered where the box ◇ is located within the product name when the cable is included with the product.

- Check the website for detailed information on the specification.

*1 The values inside the brackets ( ) represent the specification for the electromagnetic brake type.
*2 If the wiring distance between the electromagnetic brake type motor and driver is extended to 20 m using an accessory cable (sold separately), the 24 VDC± 4% specification applies.

Notes

- The rotor inertia represents a sum of the moments of inertia of the harmonic gear converted to motor shaft values.

Speed - Torque Characteristics (Reference Value)

AZ46 Gear Ratio **50**

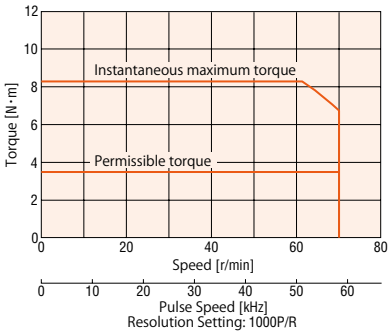

AZ66 Gear Ratio **50**

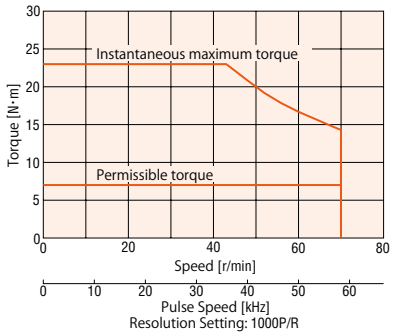

AZ98 Gear Ratio **50**

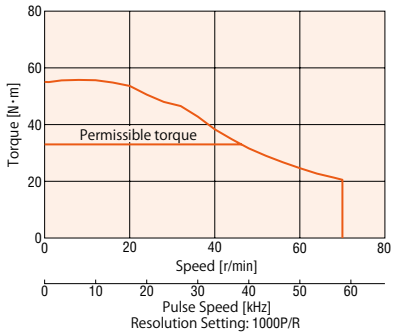

AZ46 Gear Ratio **100**

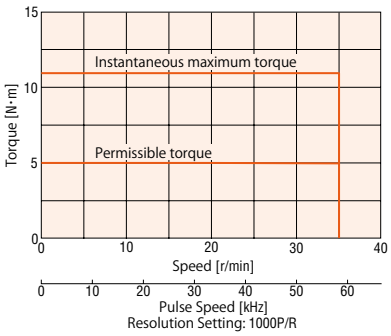

AZ66 Gear Ratio **100**

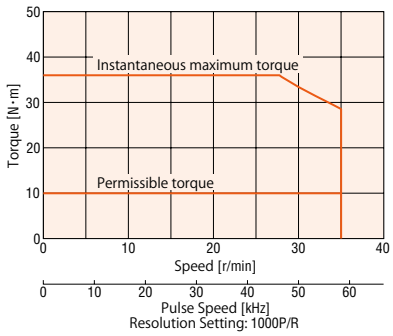

AZ98 Gear Ratio **100**

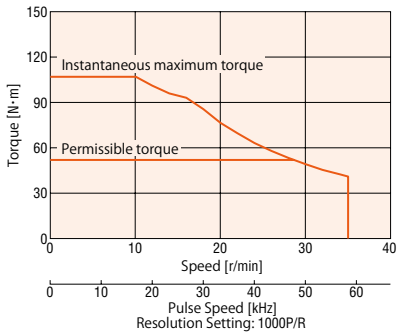

Notes

- The speed-torque characteristics are data based upon our measurement conditions. When these conditions change, these characteristics may change.
- Depending on the driving conditions, a considerable amount of heat may be generated by the motor. Be sure to keep the motor case temperature at 80°C or less in order to protect the ABZO sensor.
  (When conforming to the UL standards, it is required to keep the temperature of the motor case at 75°C or less, since the motor is recognized as thermal class A.)

Driver Specifications

			Built-in Controller Type	Pulse-Input Type
I/O Functions	Pulse-Input Type		–	Maximum input pulse Frequency Host controller has line driver output: 1 MHz (when Duty 50%) Host controller has open collector output: 250 kHz (when Duty 50%) Negative logic pulse input (initial values)
	Direct Input		Number of Input: 10	Number of Input: 6
	Direct Output		Number of Output: 6	
	RS-485 Communications	Network Input	16 Bit	–
		Network Output	16 Bit	–
Number of Positioning Data Sets			256	256 (up to 32 available)
Data Setting Software **MEXE02**			○	

Built-in Controller Type RS-485 Communication Specification

Protocol	Modbus RTU mode
Electrical Characteristics	EIA-485 standard, straight cable Using shielded twisted pair cables (recommended TIA/EIA-568B CAT5e or more), a total maximum length of 50 m can be used.
Communication Mode	Half-duplex communications, start-stop synchronization (data: 8-bit, stop bit(s): 1 bit/2 bits, parity: none/even/odd)
Baud Rate	Selection from 9600 bps/19200 bps/38400 bps/57600 bps/115200 bps/230400 bps
Connection Type	A maximum of 31 units could be connected for each programmable controller (master device).

General Specifications

		Motor	Driver	
			Built-in Controller Type	Pulse-Input Type
Thermal Class		130 (B) [UL is certified as 105 (A)]	–	
Insulation Resistance		The measured value is 100 MΩ or more when a 500 VDC megger is applied between the following locations: ・Case - Motor Windings ・Case - Electromagnetic Brake Windings*1	The measured value is 100 MΩ or more when a 500 VDC megger is applied between the following locations: ・Protective Earth Terminal - Power Supply Terminal ・Encoder Connector - Power Supply Terminal ・Power Input Terminal - Power Supply Terminal	
Dielectric Strength		No abnormality is found with the following application for 1 minute: ・Case - Motor Windings 1.5 kVAC, 50 Hz or 60 Hz ・Case - Electromagnetic Brake Windings*1 1.5 kVAC, 50 Hz or 60 Hz	No abnormality is found with the following application for 1 minute: ・Protective Earth Terminal - Power Supply Terminal 1.5 kVAC, 50 Hz or 60 Hz ・Encoder Connector - Power Supply Terminal 1.8 kVAC, 50 Hz or 60 Hz ・I/O Signal Terminal - Power Supply Terminal 1.8 kVAC, 50 Hz or 60 Hz	
Operating Environment (in operation)	Ambient Temperature	0～+40°C (non-freezing)	0～+55°C (non-freezing)*2	
	Ambient Humidity	85% or less (no condensation)		
	Atmosphere	No corrosive gases or dirt. Not directly affected by water or oil.		
Degree of Protection		IP66 (excluding mounting surface and connector)	IP10	IP20
Stop Position Accuracy		**AZ46**: ±4 min (±0.067°) **AZ66**, **AZ69**, **AZ98**, **AZ911**: ±3 min (±0.05°)		
Shaft Runout		0.05 T.I.R. (mm)*3	–	
Concentricity		0.075 T.I.R. (mm)*3	–	
Perpendicularity		0.075 T.I.R. (mm)*3	–	
Multi-rotation detection range in power off state		±900 rotations (1,800 rotations)		

*1 Electromagnetic brake type only
*2 When attaching a heat sink equivalent to or more than an aluminum plate of 200×200 mm with thickness of 2 mm
*3 T.I.R. (Total Indicator Reading): Centered around the reference shaft, this expresses the total volume read from the dial gauge when the measured section is rotated once.

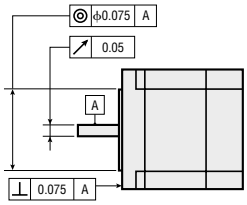

Notes

● When connecting the motor and the driver, do not measure insulation resistance or perform pressure resistance tests. Furthermore, do not perform these tests on the motor ABZO sensor.

Permissible Radial Load and Permissible Axial Load

Unit: N

Type	Motor Frame Size	Product	Gear Ratio	Permissible Radial Load					Permissible Axial Load
				Distance from Shaft End mm					
				0	5	10	15	20	
Standard Type	42 mm	**AZ46**	–	35	44	58	85	–	15
	60 mm	**AZ66**, **AZ69**		90	100	130	180	270	30
	85 mm	**AZ98**, **AZ911**		260	290	340	390	480	60
TS Geared Type	42 mm	**AZ46**	**3.6**, **7.2**, **10**	20	30	40	50	–	15
			20, **30**	40	50	60	70	–	
	60 mm	**AZ66**	**3.6**, **7.2**, **10**	120	135	150	165	180	40
			20, **30**	170	185	200	215	230	
	90 mm	**AZ98**	**3.6**, **7.2**, **10**	300	325	350	375	400	150
			20, **30**	400	450	500	550	600	
PS Geared Type	42 mm	**AZ46**	**5**	70	80	95	120	–	100
			7.2	80	90	110	140	–	
			10	85	100	120	150	–	
			25	120	140	170	210	–	
			36	130	160	190	240	–	
			50	150	170	210	260	–	
	60 mm	**AZ66**	**5**	170	200	230	270	320	200
			7.2	200	220	260	310	370	
			10	220	250	290	350	410	
			25	300	340	400	470	560	
			36	340	380	450	530	630	
			50	380	430	500	600	700	
	90 mm	**AZ98**	**5**	380	420	470	540	630	600
			7.2	430	470	530	610	710	
			10	480	530	590	680	790	
			25	650	720	810	920	1070	
			36	730	810	910	1040	1210	
			50	820	910	1020	1160	1350	
HPG Geared Type	40 mm	**AZ46**	**5**	150	170	190	230	270	430
			9	180	200	230	270	320	510
	60 mm	**AZ66**	**5**	250	270	300	330	360	700
			15	360	380	420	460	510	980
	90 mm	**AZ98**	**5**	600	630	670	710	750	1460
			15	830	880	930	980	1050	2030
Harmonic Geared Type	42 mm	**AZ46**	**50**, **100**	180	220	270	360	510	220
	60 mm	**AZ66**		320	370	440	550	720	450
	90 mm	**AZ98**		1090	1150	1230	1310	1410	1300

- The products can be identified with the detailed product code.
- **PS** geared type, **HPG** geared type, when either the permissible radial load or permissible axial load are added, shall have a lifespan value satisfying 20,000 hours. For the gearhead lifespan please contact the nearest Oriental Motor sales office.

Radial Load and Axial Load

Distance from Shaft End [mm]

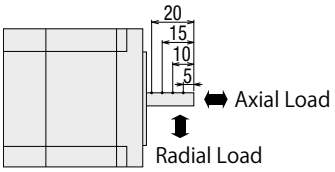

Permissible Moment Load

If an excentric load is applied when attaching an arm or table to the flange face, calculate the moment load with the following formula. The moment load should not exceed the permissible values shown in the table below.

HPG Geared Type Flange Output Type

Product Name	Gear Ratio	Permissible Moment Load (N·m)
AZ46	**5**	4.9
	9	5.9
AZ66	**5**	12
	15	17.2
AZ98	**5**	38.7
	15	53.5

The required moment load can be calculated according to the following formula.

Example 1:When external force F is applied at a distance of L from the centre of the output flange

Required moment load [N·m]: M=F ×L

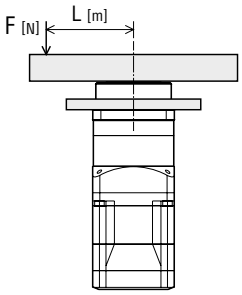

Example 2:When external force F1 is applied at a distance of L from the surface mounting of the output flange

Required moment load[N·m]: M=F1× (L+coefficient a)

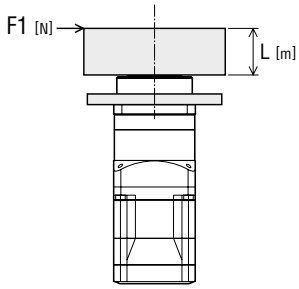

Product Name	Coefficient a (m)
AZ46	0.006
AZ66	0.011
AZ98	0.0115

Harmonic Geared Type

Product Name	Gear Ratio	Permissible Moment Load (N·m)
AZ46	**50, 100**	5.6
AZ66		11.6

The required moment load can be calculated according to the following formula.

Example 1:When external force F is applied at a distance of L from the centre of the output flange

Required moment load [N·m]: M=F ×L

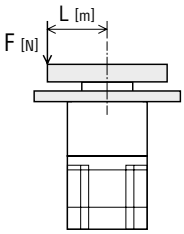

Load Torque - Driver Input Current Characteristics

The following are the relationships between the load torque and driver input current at each speed when the motor is operated. From these characteristics, it is possible to estimate the current capacity actually required when used with multiple axes. For geared motors, convert to torque and speed at the motor shaft.

Motor shaft speed = Gear output shaft speed x Gear ratio [r/min]

$$\text{Motor shaft torque} = \frac{\text{Gear output shaft torque}}{\text{Gear Ratio}} \text{ [N·m]}$$

Single-Phase 100-120 VAC

AZ46□A

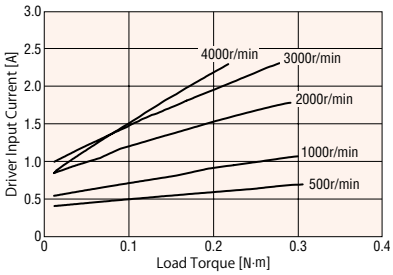

AZ66□A

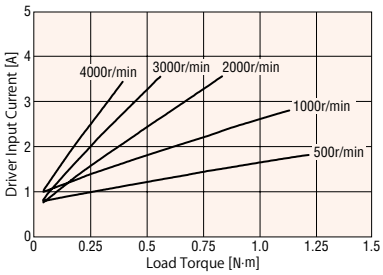

AZ69□A

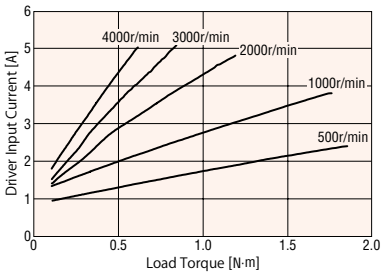

AZ98□A

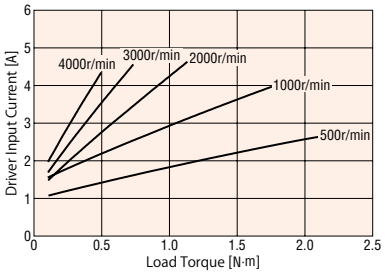

AZ911□A

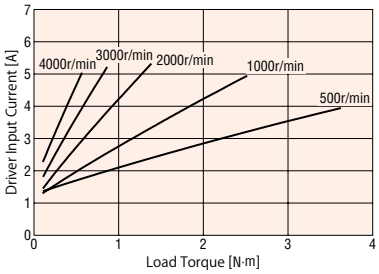

Single Phase 200–240 VAC

AZ46□C

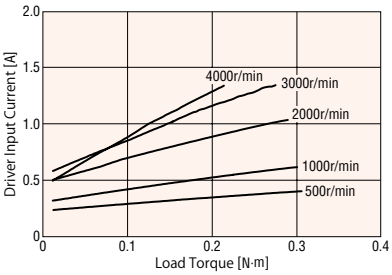

AZ66□C

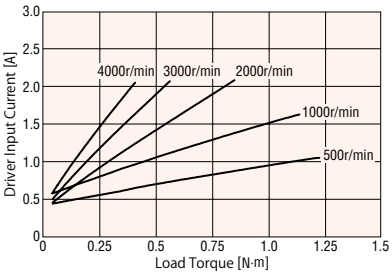

AZ69□C

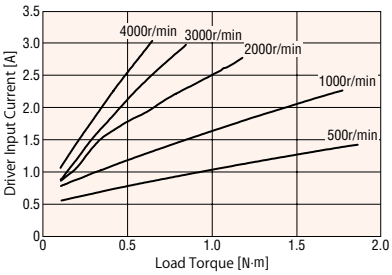

AZ98□C

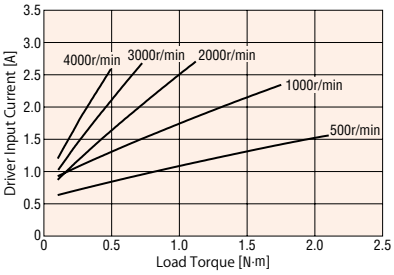

AZ911□C

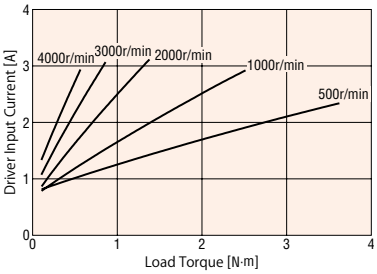

Three Phase 200–240 VAC

AZ46□C

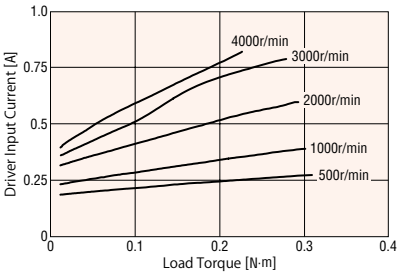

AZ66□C

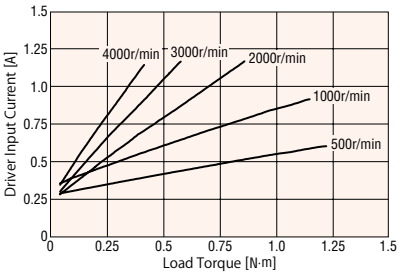

AZ69□C

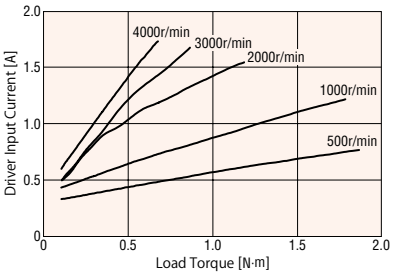

AZ98□C

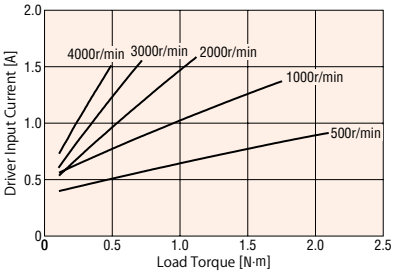

AZ911□C

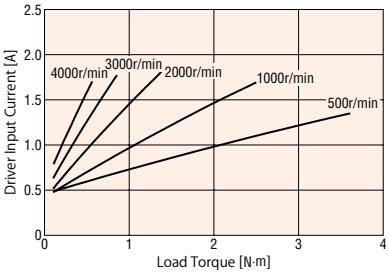

Dimensions (Unit = mm)

Motors

◇Standard Type

Frame Size 42 mm

Product Name		Motor Product Name	Mass kg
Built-in Controller	Pulse-Input		
AZ46A□D-◇	**AZ46A□-◇**	AZM46AC	0.44

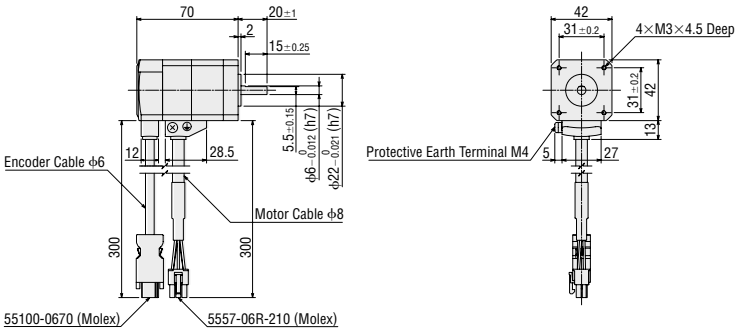

Frame Size 60 mm

Product Name		Motor Product Name	L	Mass kg
Built-in Controller	Pulse-Input			
AZ66A□D-◇	**AZ66A□-◇**	AZM66AC	72	0.91
AZ69A□D-◇	**AZ69A□-◇**	AZM69AC	97.5	1.4

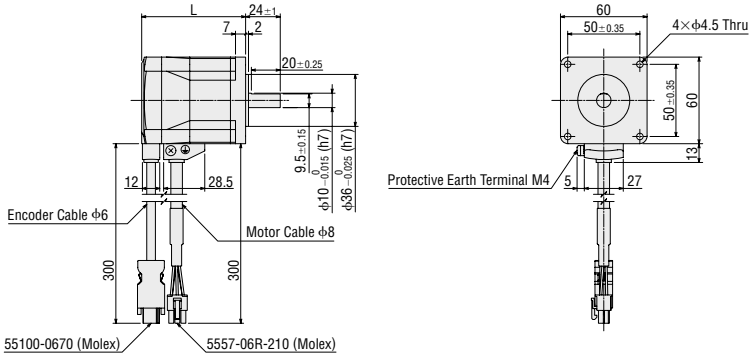

Frame Size 85 mm

Product Name		Motor Product Name	L	Mass kg
Built-in Controller	Pulse-Input			
AZ98A□D-◇	**AZ98A□-◇**	AZM98AC	84	1.9
AZ911A□D-◇	**AZ911A□-◇**	AZM911AC	114	3

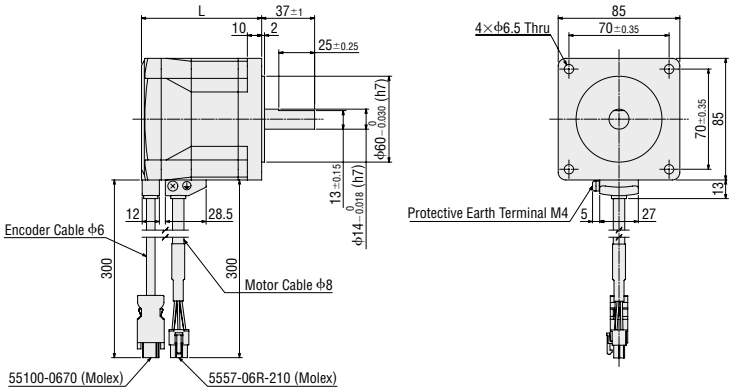

● Either **A** (single-phase 100-120 VAC) or **C** (single-phase/three-phase 200-240 VAC) indicating the power supply input is entered where the box □ is located within the product name.
A number indicating the desired length of **1** (1 m), **2** (2 m) or **3** (3 m) is entered where the box ◇ is located within the product name when the cable is included with the product.

◇Standard Type with Electromagnetic Brake

Frame Size 42 mm

Product Name		Motor Product Name	Mass kg
Built-in Controller	Pulse-Input		
AZ46M□D-◇	**AZ46M□-◇**	AZM46MC	0.61

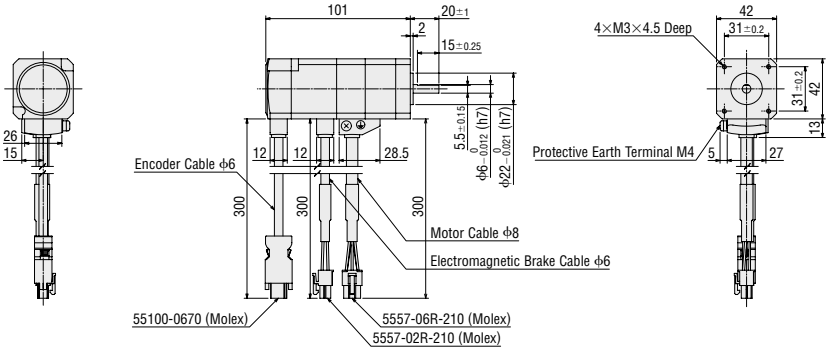

Frame Size 60 mm

Product Name		Motor Product Name	L	Mass kg
Built-in Controller	Pulse-Input			
AZ66M□D-◇	**AZ66M□-◇**	AZM66MC	118	1.3
AZ69M□D-◇	**AZ69M□-◇**	AZM69MC	143.5	1.8

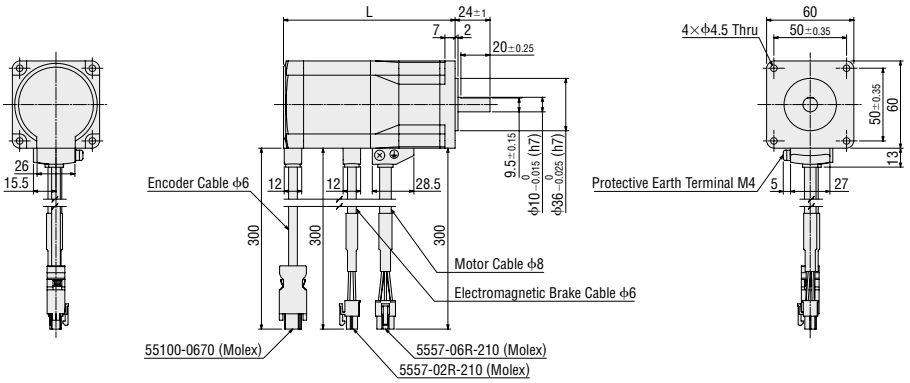

Frame Size 85 mm

Product Name		Motor Product Name	Mass kg
Built-in Controller	Pulse-Input		
AZ98M□D-◇	**AZ98M□-◇**	AZM98MC	2.5

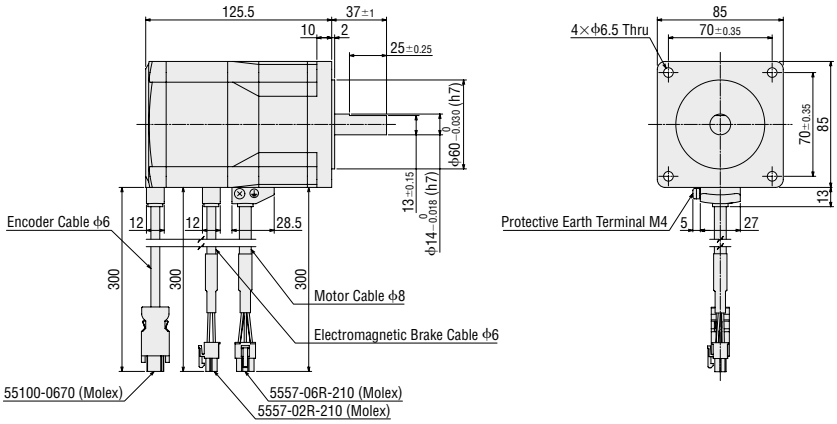

● The □ within the product name includes **A** (single phase 100–120 V) or **C** (single phase/three phase 200–240 V) expressing power input.
A number indicating the desired length of **1** (1 m), **2** (2 m) or **3** (3 m) is entered where the box ◇ is located within the product name when the cable is included with the product.

◇TS Geared Type

Frame Size 42 mm

Product Name		Motor Product Name	Gear Ratio	Mass kg
Built-in Controller	Pulse-Input			
AZ46A□D-TS■-◇	**AZ46A□-TS■-◇**	AZM46AC-TS■	**3.6**, **7.2**, **10**, **20**, **30**	0.59

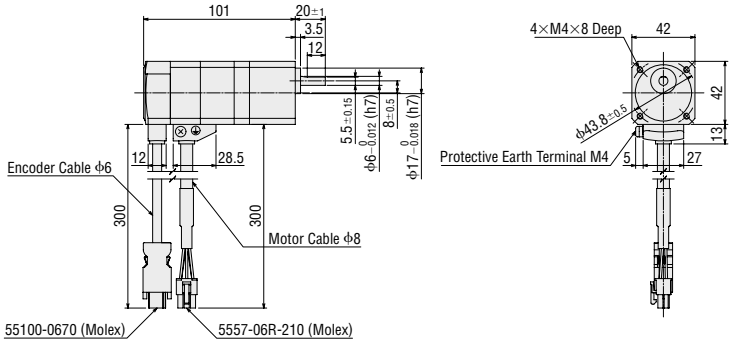

Frame Size 60 mm

Product Name		Motor Product Name	Gear Ratio	Mass kg
Built-in Controller	Pulse-Input			
AZ66A□D-TS■-◇	**AZ66A□-TS■-◇**	AZM66AC-TS■	**3.6**, **7.2**, **10**, **20**, **30**	1.3

● Installation screw: M4×60 P0.7 (4 screws included)

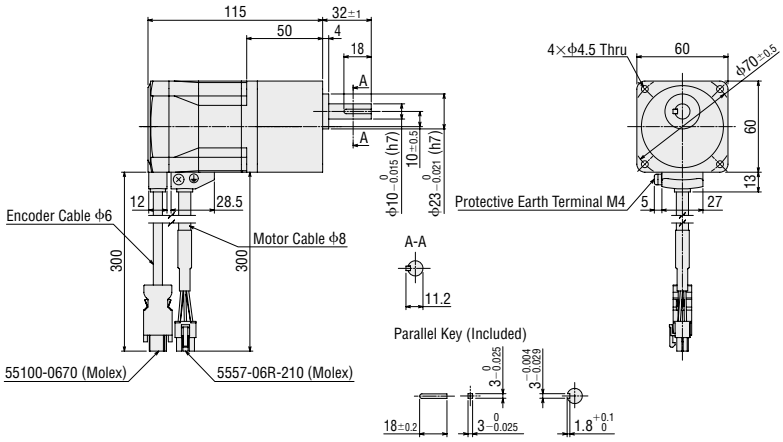

Frame Size 90 mm

Product Name		Motor Product Name	Gear Ratio	Mass kg
Built-in Controller	Pulse-Input			
AZ98A□D-TS■-◇	**AZ98A□-TS■-◇**	AZM98AC-TS■	**3.6**, **7.2**, **10**, **20**, **30**	3.1

● Installation screw: M8×90 P1.25 (4 screws included)

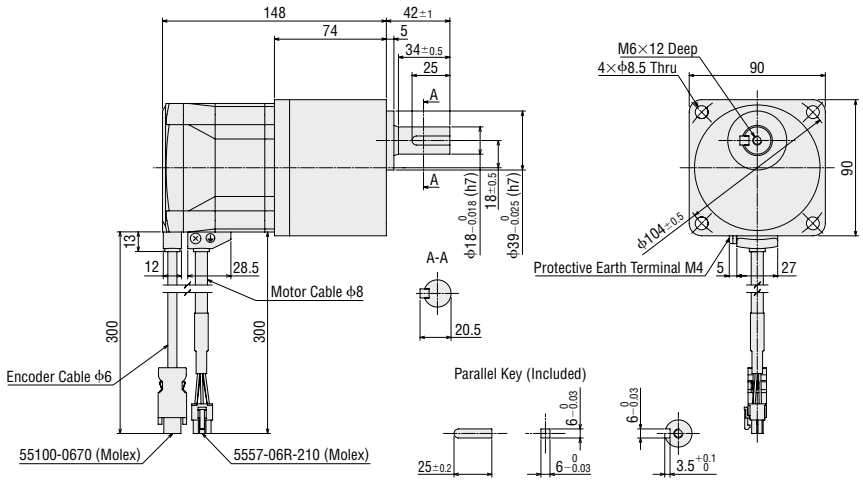

● Either **A** (single-phase 100-120 VAC) or **C** (single-phase/three-phase 200-240 VAC) indicating the power supply input is entered where the box □ is located within the product name.
The ■ within the product name includes a number expressing the gear ratio.
A number indicating the desired length of **1** (1 m), **2** (2 m) or **3** (3 m) is entered where the box ◇ is located within the product name when the cable is included with the product.

◇**TS** Geared Type with Electromagnetic Brake

Frame Size 42 mm

Product Name		Motor Product Name	Gear Ratio	Mass kg
Built-in Controller	Pulse-Input			
AZ46M□D-TS■-◇	**AZ46M□-TS■-◇**	AZM46MC-TS■	**3.6**, **7.2**, **10**, **20**, **30**	0.76

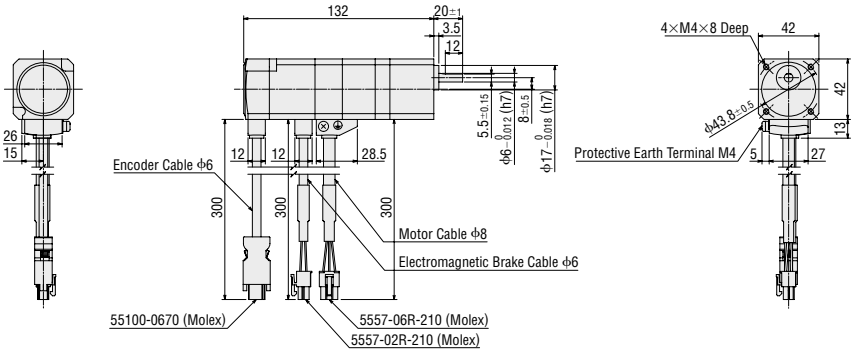

Frame Size 60 mm

Product Name		Motor Product Name	Gear Ratio	Mass kg
Built-in Controller	Pulse-Input			
AZ66M□D-TS■-◇	**AZ66M□-TS■-◇**	AZM66MC-TS■	**3.6**, **7.2**, **10**, **20**, **30**	1.7

● Installation screw: M4×60 P0.7 (4 screws included)

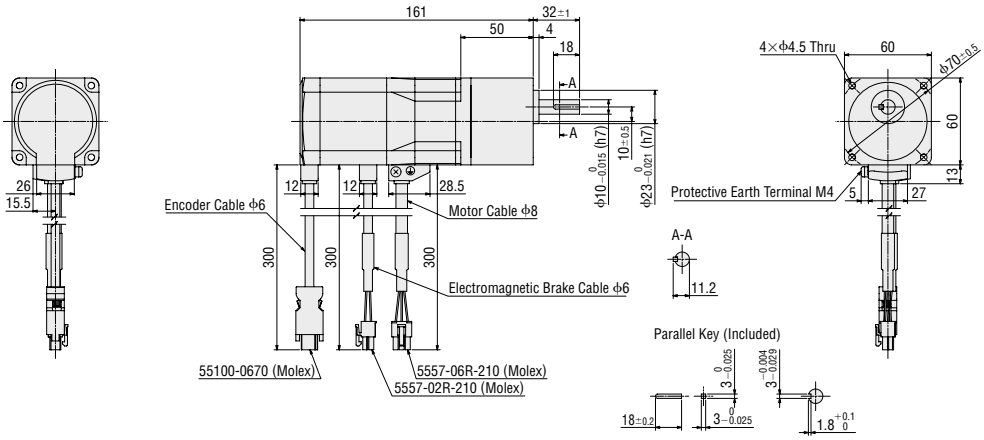

Frame Size 90 mm

Product Name		Motor Product Name	Gear Ratio	Mass kg
Built-in Controller	Pulse-Input			
AZ98M□D-TS■-◇	**AZ98M□-TS■-◇**	AZM98MC-TS■	**3.6**, **7.2**, **10**, **20**, **30**	3.7

● Installation screw: M8×90 P1.25 (4 screws included)

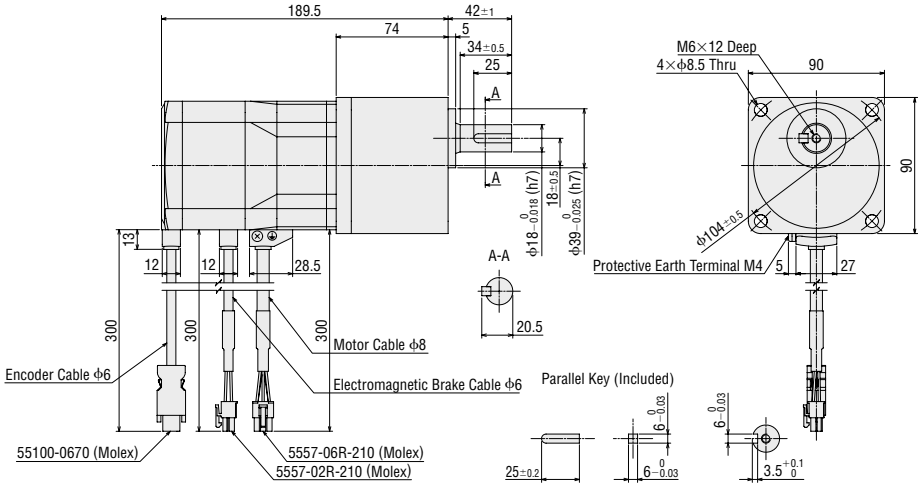

● Either **A** (single-phase 100-120 VAC) or **C** (single-phase/three-phase 200-240 VAC) indicating the power supply input is entered where the box □ is located within the product name.
The ■ within the product name includes a number expressing the gear ratio.
A number indicating the desired length of **1** (1 m), **2** (2 m) or **3** (3 m) is entered where the box ◇ is located within the product name when the cable is included with the product.

◇PS Geared Type

Frame Size 42 mm

Product Name		Motor Product Name	Gear Ratio	L	Mass kg
Built-in Controller	Pulse-Input				
AZ46A□D-PS■-◇	**AZ46A□-PS■-◇**	AZM46AC-PS■	**5**, **7.2**, **10**	98	0.64
			25, **36**, **50**	121.5	0.79

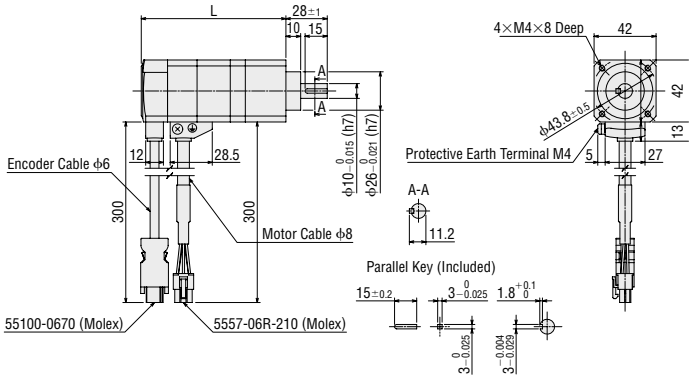

Frame Size 60 mm

Product Name		Motor Product Name	Gear Ratio	L	Mass kg
Built-in Controller	Pulse-Input				
AZ66A□D-PS■-◇	**AZ66A□-PS■-◇**	AZM66AC-PS■	**5**, **7.2**, **10**	104	1.3
			25, **36**, **50**	124	1.6

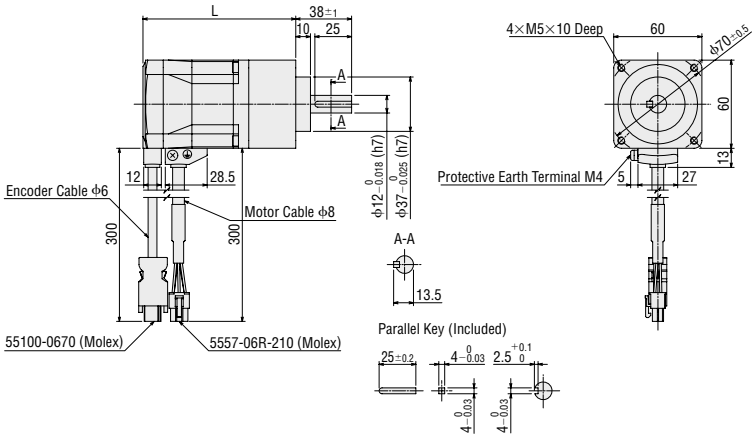

Frame Size 90 mm

Product Name		Motor Product Name	Gear Ratio	L	Mass kg
Built-in Controller	Pulse-Input				
AZ98A□D-PS■-◇	**AZ98A□-PS■-◇**	AZM98AC-PS■	**5**, **7.2**, **10**	131	3.3
			25, **36**, **50**	158.5	4.1

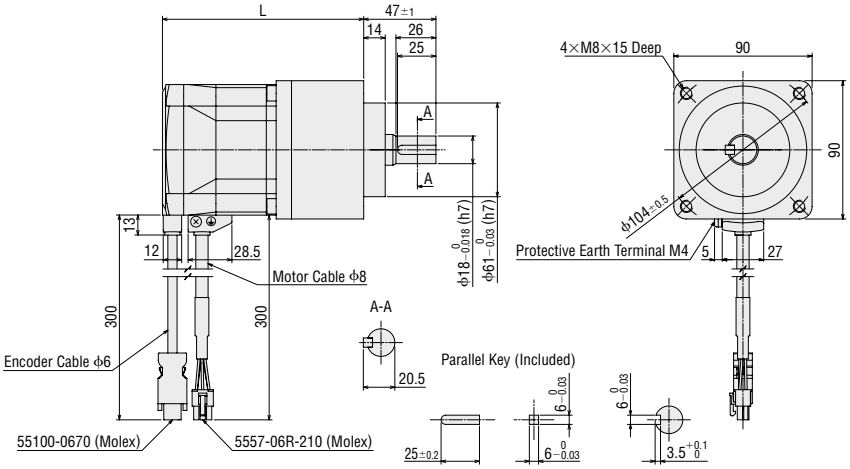

● Either **A** (single-phase 100-120 VAC) or **C** (single-phase/three-phase 200-240 VAC) indicating the power supply input is entered where the box □ is located within the product name.
The ■ within the product name includes a number expressing the gear ratio.
A number indicating the desired length of **1** (1 m), **2** (2 m) or **3** (3 m) is entered where the box ◇ is located within the product name when the cable is included with the product.

◇**PS** Geared Type with Electromagnetic Brake

Frame Size 42 mm

Product Name		Motor Product Name	Gear Ratio	L	Mass kg
Built-in Controller	Pulse-Input				
AZ46M□D-PS■-◇	**AZ46M□-PS■-◇**	AZM46MC-PS■	**5**, **7.2**, **10**	129	0.81
			25, **36**, **50**	152	0.96

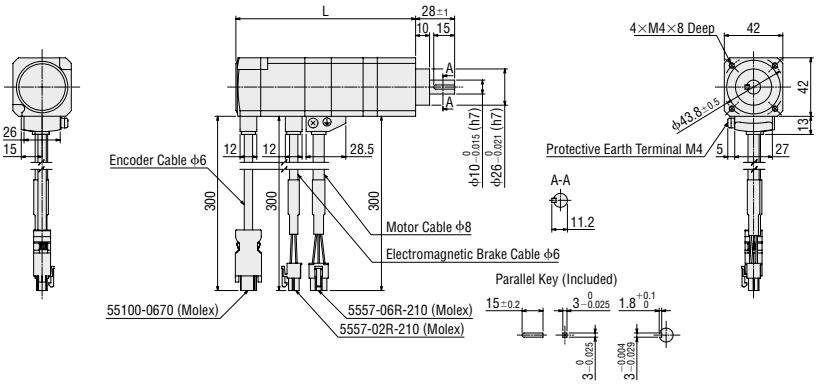

Frame Size 60 mm

Product Name		Motor Product Name	Gear Ratio	L	Mass kg
Built-in Controller	Pulse-Input				
AZ66M□D-PS■-◇	**AZ66M□-PS■-◇**	AZM66MC-PS■	**5**, **7.2**, **10**	150	1.7
			25, **36**, **50**	170	2.0

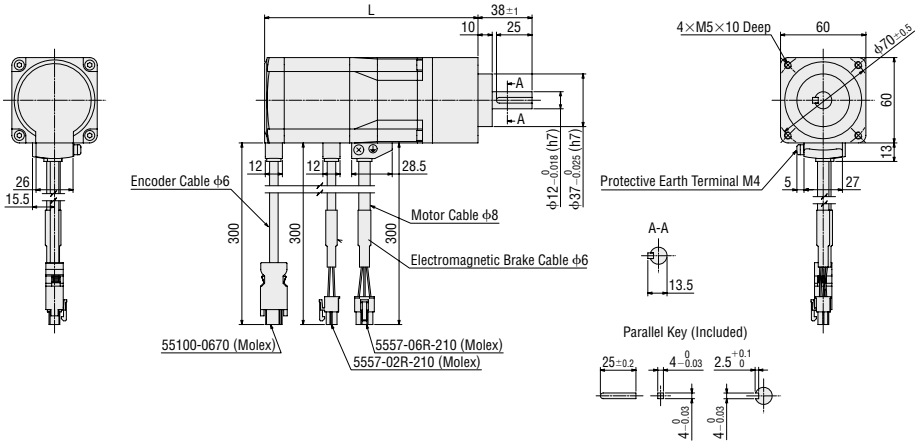

Frame Size 90 mm

Product Name		Motor Product Name	Gear Ratio	L	Mass kg
Built-in Controller	Pulse-Input				
AZ98M□D-PS■-◇	**AZ98M□-PS■-◇**	AZM98MC-PS■	**5**, **7.2**, **10**	172.5	3.9
			25, **36**, **50**	200	4.7

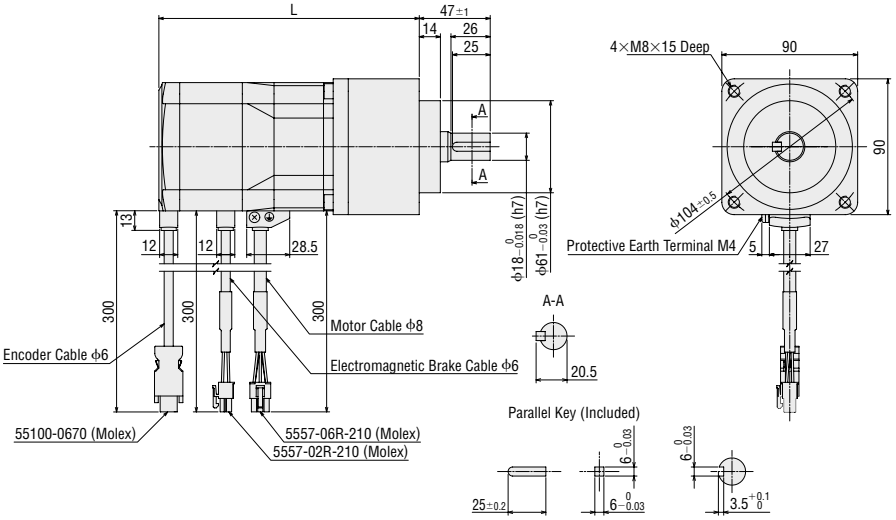

● Either **A** (single-phase 100-120 VAC) or **C** (single-phase/three-phase 200-240 VAC) indicating the power supply input is entered where the box □ is located within the product name.
The ■ within the product name includes a number expressing the gear ratio.
A number indicating the desired length of **1** (1 m), **2** (2 m) or **3** (3 m) is entered where the box ◇ is located within the product name when the cable is included with the product.

◇**HPG** Geared Type Shaft Output Type

Frame Size 40 mm

Product Name		Motor Product Name	Gear Ratio	Mass kg
Built-in Controller	Pulse-Input			
AZ46A□D-HP■-◇	**AZ46A□-HP■-◇**	AZM46AC-HP■	**5**, **9**	0.71

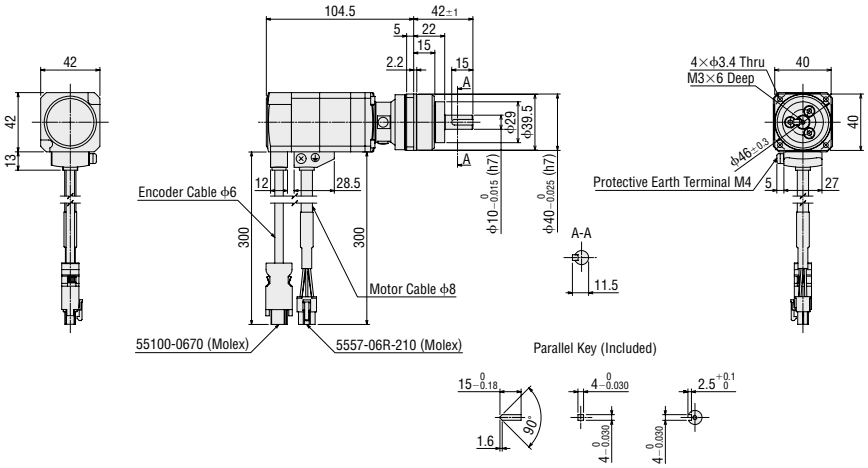

Frame Size 60 mm

Product Name		Motor Product Name	Gear Ratio	Mass kg
Built-in Controller	Pulse-Input			
AZ66A□D-HP■-◇	**AZ66A□-HP■-◇**	AZM66AC-HP■	**5**, **15**	1.9

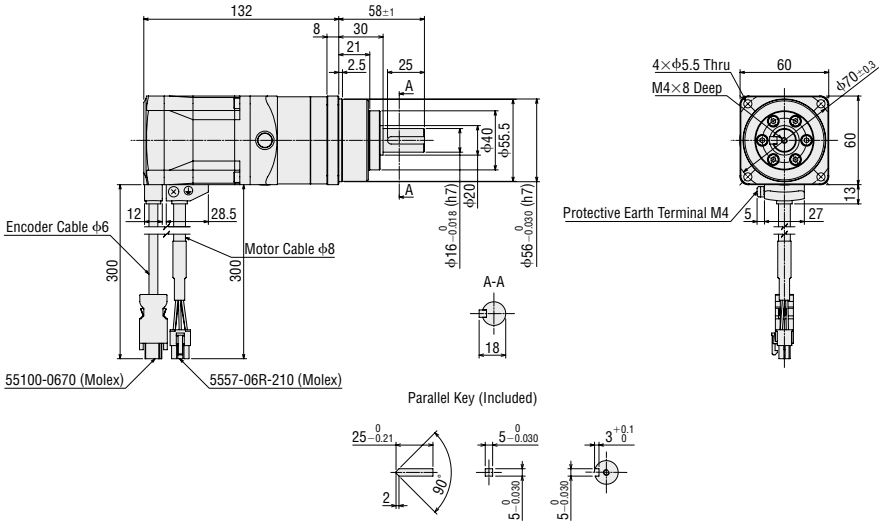

Frame Size 90 mm

Product Name		Motor Product Name	Gear Ratio	Mass kg
Built-in Controller	Pulse-Input			
AZ98A□D-HP■-◇	**AZ98A□-HP■-◇**	AZM98AC-HP■	**5**, **15**	4.8

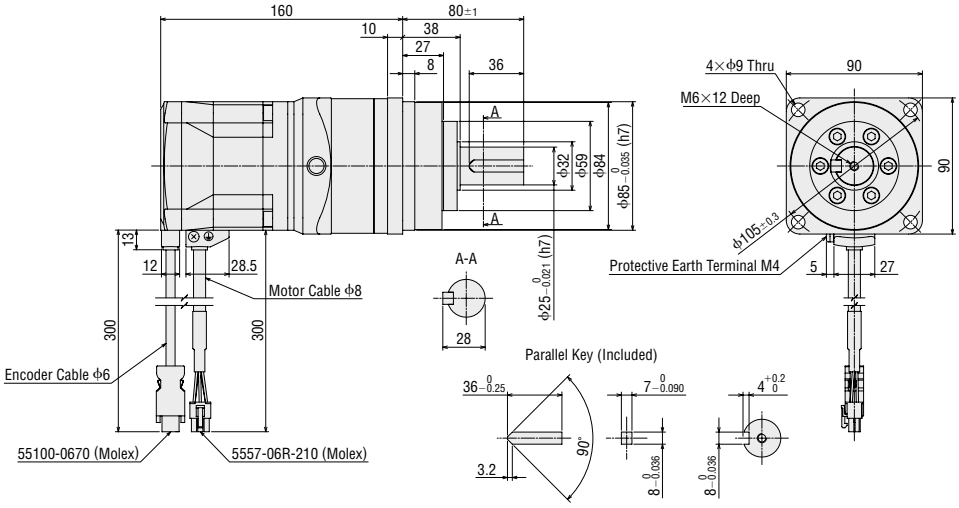

● Either **A** (single-phase 100-120 VAC) or **C** (single-phase/three-phase 200-240 VAC) indicating the power supply input is entered where the box □ is located within the product name.
The ■ within the product name includes a number expressing the gear ratio.
A number indicating the desired length of **1** (1 m), **2** (2 m) or **3** (3 m) is entered where the box ◇ is located within the product name when the cable is included with the product.

◇**HPG** Geared Type Flange Output Type

Frame Size 40 mm

Product Name		Motor Product Name	Gear Ratio	Mass kg
Built-in Controller	Pulse-Input			
AZ46A□D-HP■F-◇	**AZ46A□-HP■F-◇**	AZM46AC-HP■F	**5**, **9**	0.66

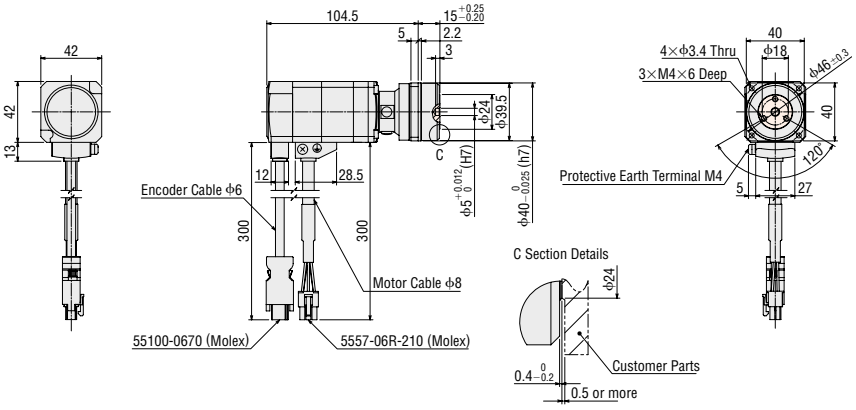

Frame Size 60 mm

Product Name		Motor Product Name	Gear Ratio	Mass kg
Built-in Controller	Pulse-Input			
AZ66A□D-HP■F-◇	**AZ66A□-HP■F-◇**	AZM66AC-HP■F	**5**, **15**	1.8

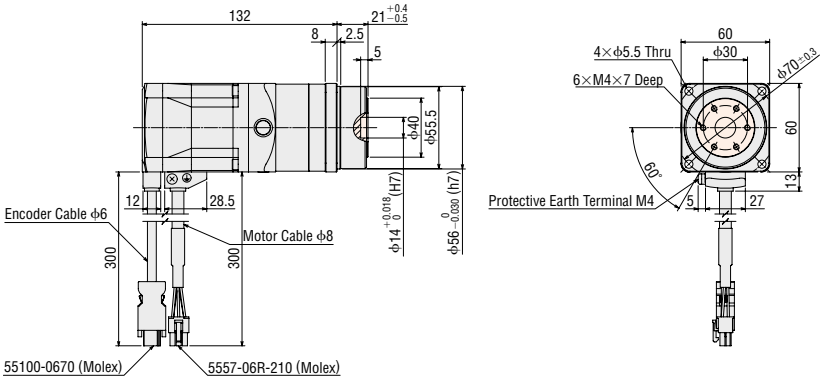

Frame Size 90 mm

Product Name		Motor Product Name	Gear Ratio	Mass kg
Built-in Controller	Pulse-Input			
AZ98A□D-HP■F-◇	**AZ98A□-HP■F-◇**	AZM98AC-HP■F	**5**	4.5
			15	4.4

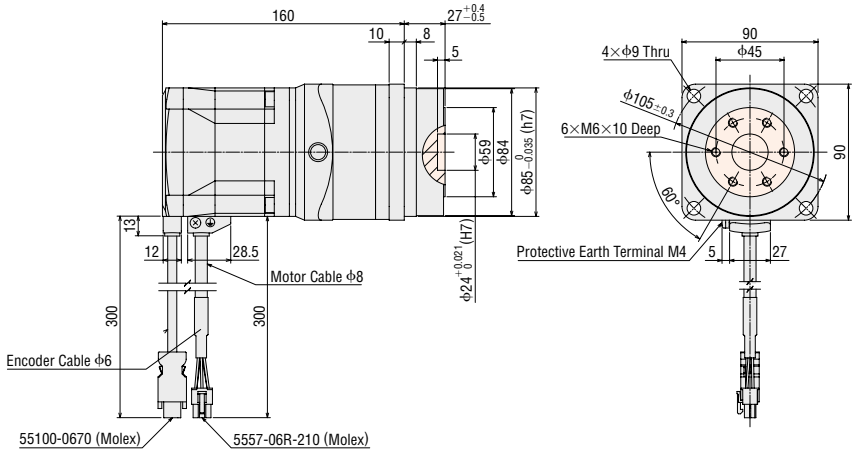

- The coloured part ▭ of the outline drawing is the rotation section.
- Either **A** (single-phase 100-120 VAC) or **C** (single-phase/three-phase 200-240 VAC) indicating the power supply input is entered where the box □ is located within the product name.
  The ■ within the product name includes a number expressing the gear ratio.
  A number indicating the desired length of **1** (1 m), **2** (2 m) or **3** (3 m) is entered where the box ◇ is located within the product name when the cable is included with the product.

◇**HPG** Geared Type with Electromagnetic Brake Shaft Output Type

Frame Size 40 mm

Product Name		Motor Product Name	Gear Ratio	Mass kg
Built-in Controller	Pulse-Input			
AZ46M□D-HP■-◇	**AZ46M□-HP■-◇**	AZM46MC-HP■	**5, 9**	0.88

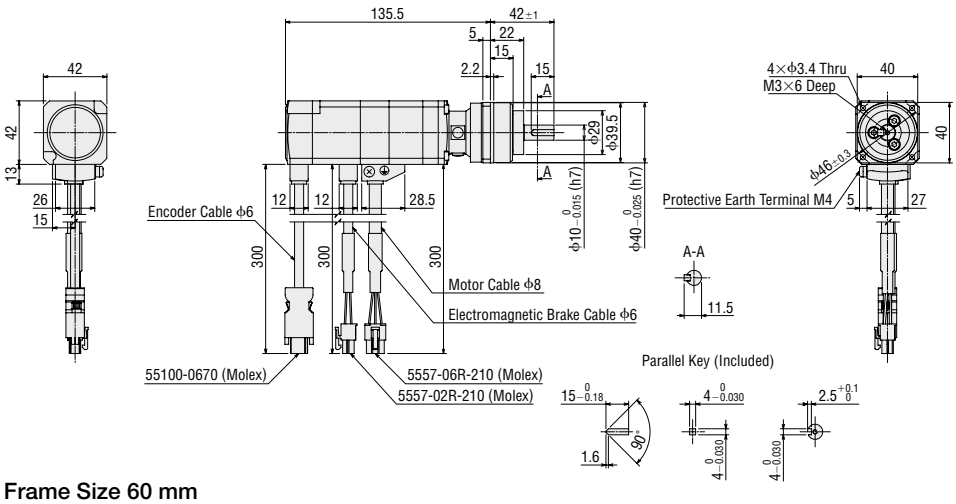

Frame Size 60 mm

Product Name		Motor Product Name	Gear Ratio	Mass kg
Built-in Controller	Pulse-Input			
AZ66M□D-HP■-◇	**AZ66M□-HP■-◇**	AZM66MC-HP■	**5, 15**	2.3

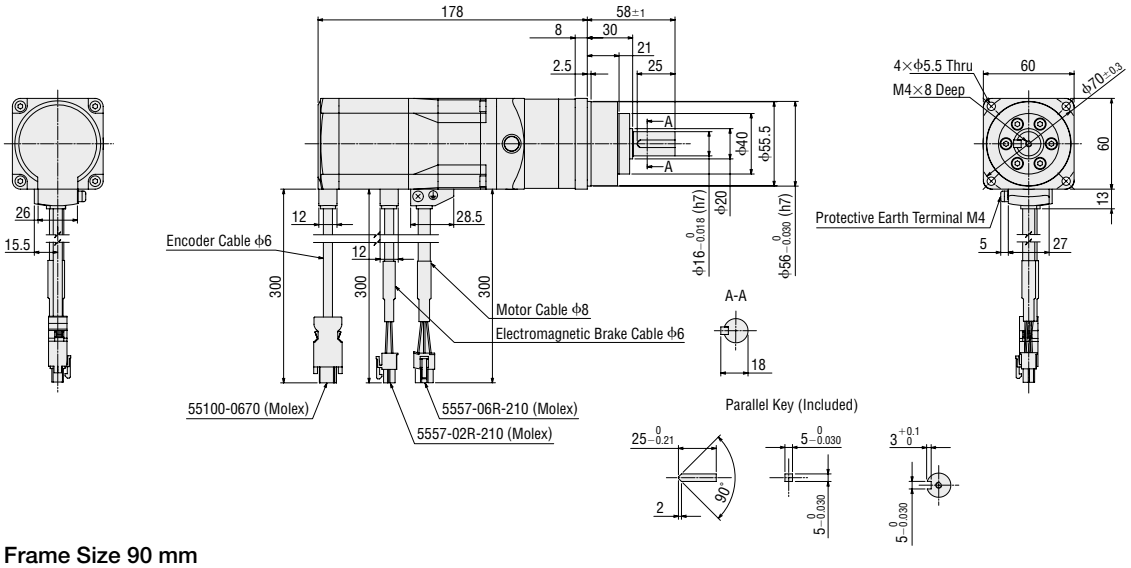

Frame Size 90 mm

Product Name		Motor Product Name	Gear Ratio	Mass kg
Built-in Controller	Pulse-Input			
AZ98M□D-HP■-◇	**AZ98M□-HP■-◇**	AZM98MC-HP■	**5, 15**	5.4

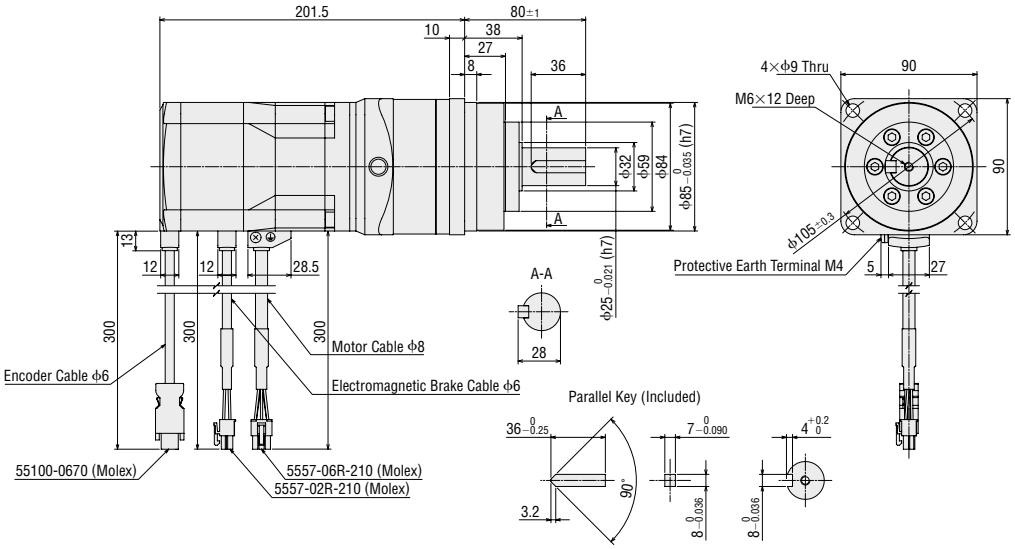

● Either **A** (single-phase 100-120 VAC) or **C** (single-phase/three-phase 200-240 VAC) indicating the power supply input is entered where the box □ is located within the product name.
The ■ within the product name includes a number expressing the gear ratio.
A number indicating the desired length of **1** (1 m), **2** (2 m) or **3** (3 m) is entered where the box ◇ is located within the product name when the cable is included with the product.

◇**HPG** Geared Type with Electromagnetic Brake Flange Output Type

Frame Size 40 mm

Product Name		Motor Product Name	Gear Ratio	Mass kg
Built-in Controller	Pulse-Input			
AZ46M□D-HP■F-◇	**AZ46M□-HP■F-◇**	AZM46MC-HP■F	**5**, **9**	0.83

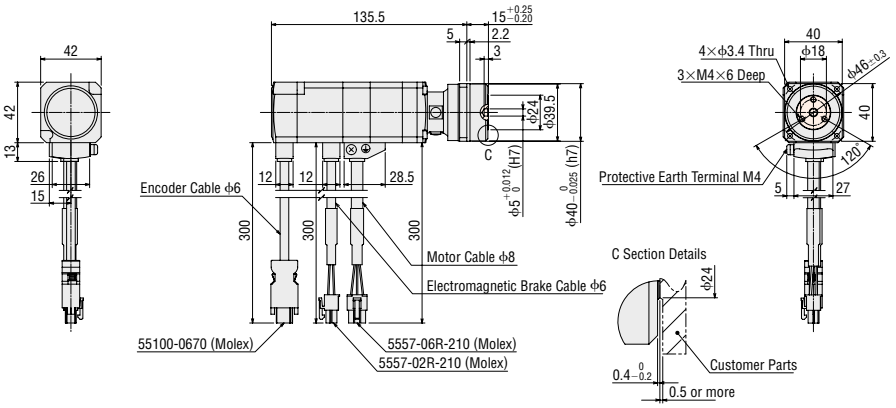

Frame Size 60 mm

Product Name		Motor Product Name	Gear Ratio	Mass kg
Built-in Controller	Pulse-Input			
AZ66M□D-HP■F-◇	**AZ66M□-HP■F-◇**	AZM66MC-HP■F	**5**, **15**	2.2

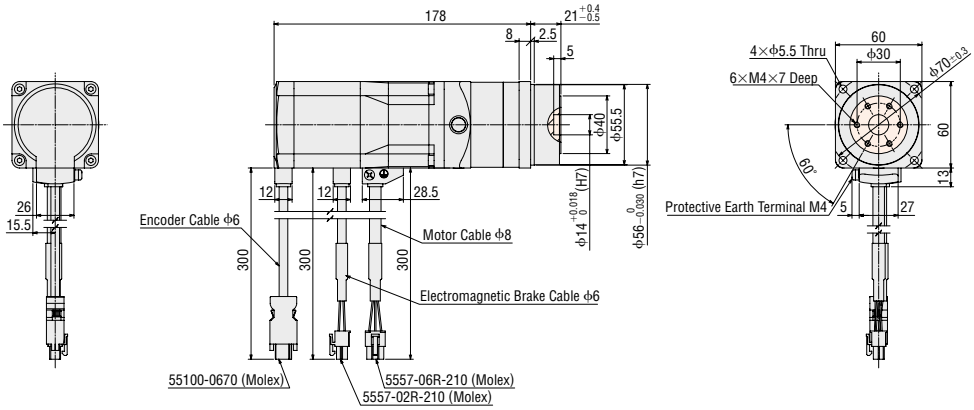

Frame Size 90 mm

Product Name		Motor Product Name	Gear Ratio	Mass kg
Built-in Controller	Pulse-Input			
AZ98M□D-HP■F-◇	**AZ98M□-HP■F-◇**	AZM98MC-HP■F	**5**	5.1
			15	5

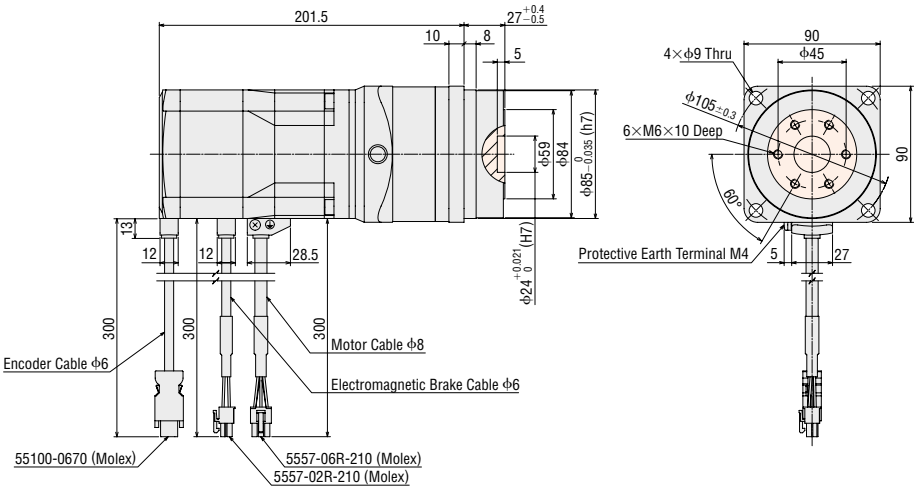

- The coloured part ▭ of the outline drawing is the rotation section.
- Either **A** (single-phase 100-120 VAC) or **C** (single-phase/three-phase 200-240 VAC) indicating the power supply input is entered where the box ▭ is located within the product name.
  The ■ within the product name includes a number expressing the gear ratio.
  A number indicating the desired length of **1** (1 m), **2** (2 m) or **3** (3 m) is entered where the box ◇ is located within the product name when the cable is included with the product.

◇Harmonic Geared Type

Frame Size 42 mm

Product Name		Motor Product Name	Gear Ratio	Mass kg
Built-in Controller	Pulse-Input			
AZ46A□D-HS■-◇	**AZ46A□-HS■-◇**	AZM46AC-HS■	**50, 100**	0.65

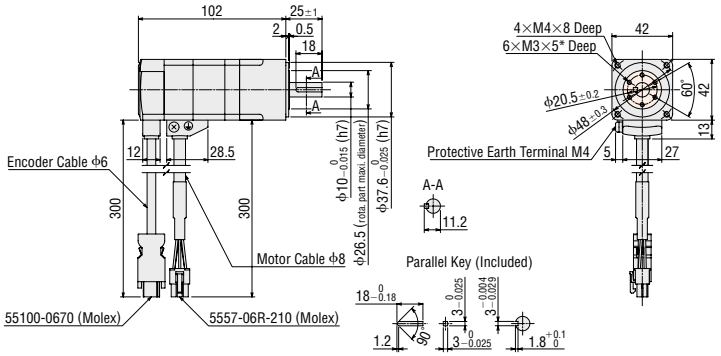

✻The position of the output shaft relative to the screw holes on the rotating part is arbitrary.

Frame Size 60 mm

Product Name		Motor Product Name	Gear Ratio	Mass kg
Built-in Controller	Pulse-Input			
AZ66A□D-HS■-◇	**AZ66A□-HS■-◇**	AZM66AC-HS■	**50, 100**	1.4

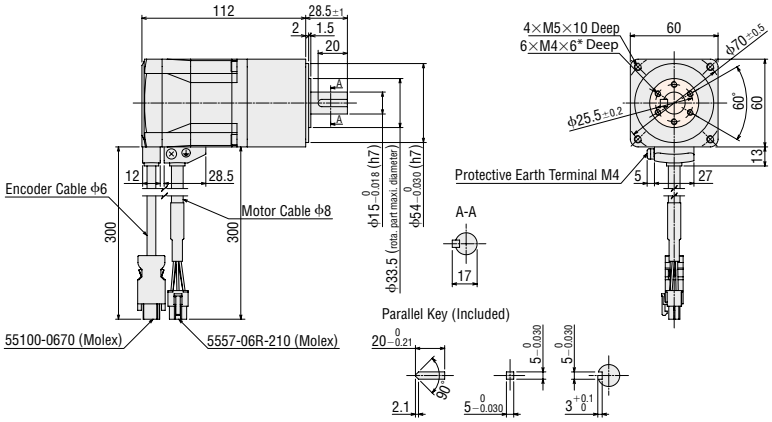

✻The position of the output shaft relative to the screw holes on the rotating part is arbitrary.

Frame Size 90 mm

Product Name		Motor Product Name	Gear Ratio	Mass kg
Built-in Controller	Pulse-Input			
AZ98A□D-HS■-◇	**AZ98A□-HS■-◇**	AZM98AC-HS■	**50, 100**	3.9

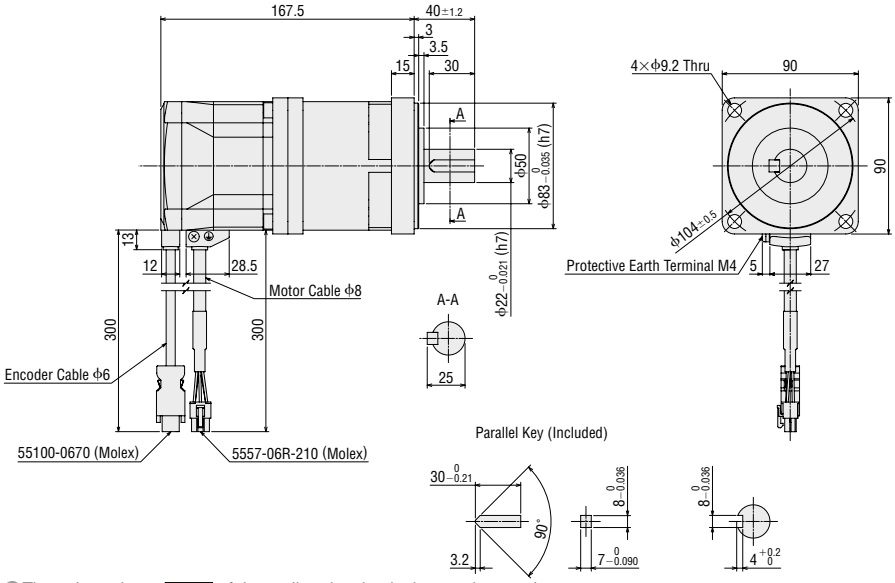

- The coloured part ▭ of the outline drawing is the rotation section.
- Either **A** (single-phase 100-120 VAC) or **C** (single-phase/three-phase 200-240 VAC) indicating the power supply input is entered where the box □ is located within the product name.
  The ■ within the product name includes a number expressing the gear ratio.
  A number indicating the desired length of **1** (1 m), **2** (2 m) or **3** (3 m) is entered where the box ◇ is located within the product name when the cable is included with the product.

◇Harmonic Geared Type with Electromagnetic Brake

Frame Size 42 mm

Product Name		Motor Product Name	Gear Ratio	Mass kg
Built-in Controller	Pulse-Input			
AZ46M□D-HS■-◇	**AZ46M□-HS■-◇**	AZM46MC-HS■	**50, 100**	0.82

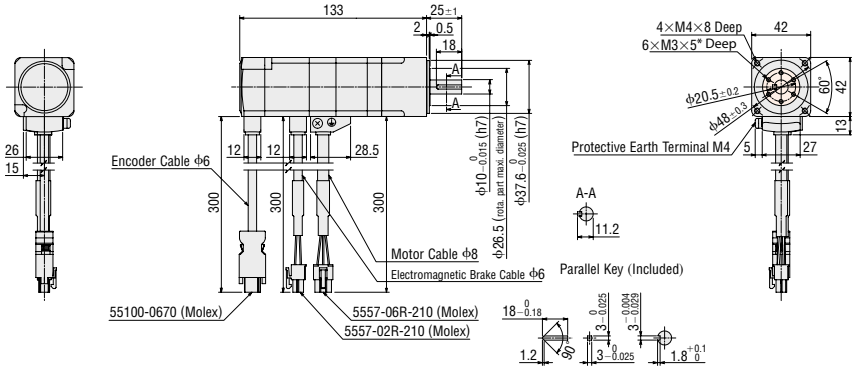

∗The position of the output shaft relative to the screw holes on the rotating part is arbitrary.

Frame Size 60 mm

Product Name		Motor Product Name	Gear Ratio	Mass kg
Built-in Controller	Pulse-Input			
AZ66M□D-HS■-◇	**AZ66M□-HS■-◇**	AZM66MC-HS■	**50, 100**	1.8

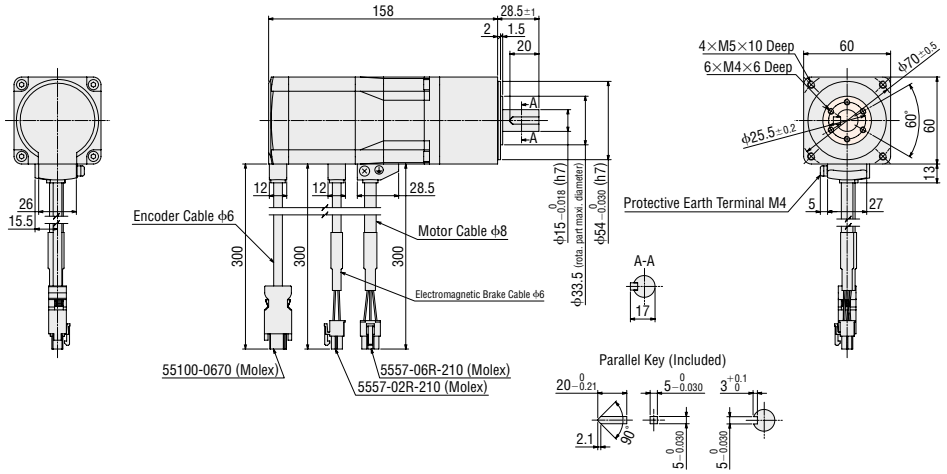

∗The position of the output shaft relative to the screw holes on the rotating part is arbitrary.

Frame Size 90 mm

Product Name		Motor Product Name	Gear Ratio	Mass kg
Built-in Controller	Pulse-Input			
AZ98M□D-HS■-◇	**AZ98M□-HS■-◇**	AZM98MC-HS■	**50, 100**	4.5

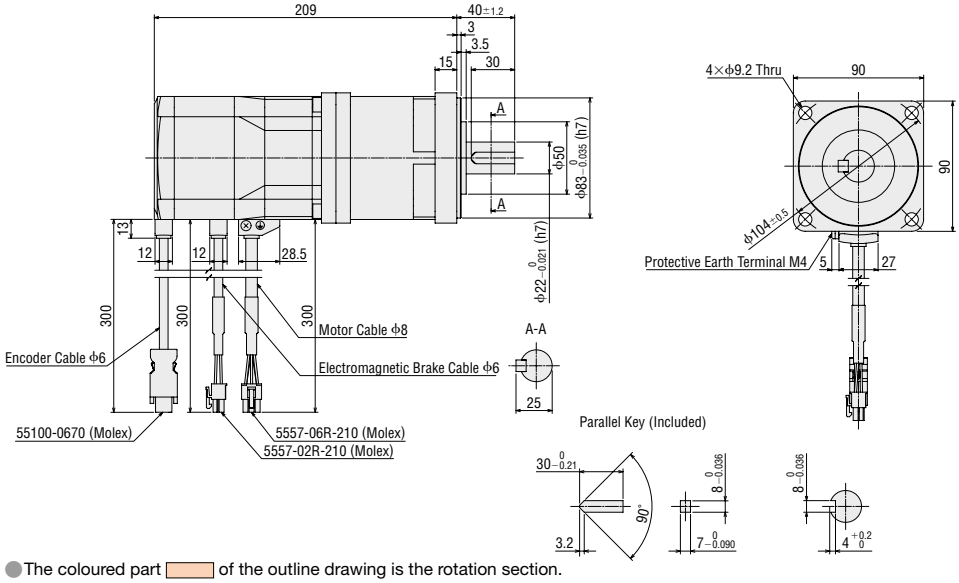

- The coloured part ▭ of the outline drawing is the rotation section.
- Either **A** (single-phase 100-120 VAC) or **C** (single-phase/three-phase 200-240 VAC) indicating the power supply input is entered where the box □ is located within the product name.
  The ■ within the product name includes a number expressing the gear ratio.
  A number indicating the desired length of **1** (1 m), **2** (2 m) or **3** (3 m) is entered where the box ◇ is located within the product name when the cable is included with the product.

Drivers

◇Built-in Controller Type

Driver Product Name: AZD-AD, AZD-CD
Mass: 0.65 kg

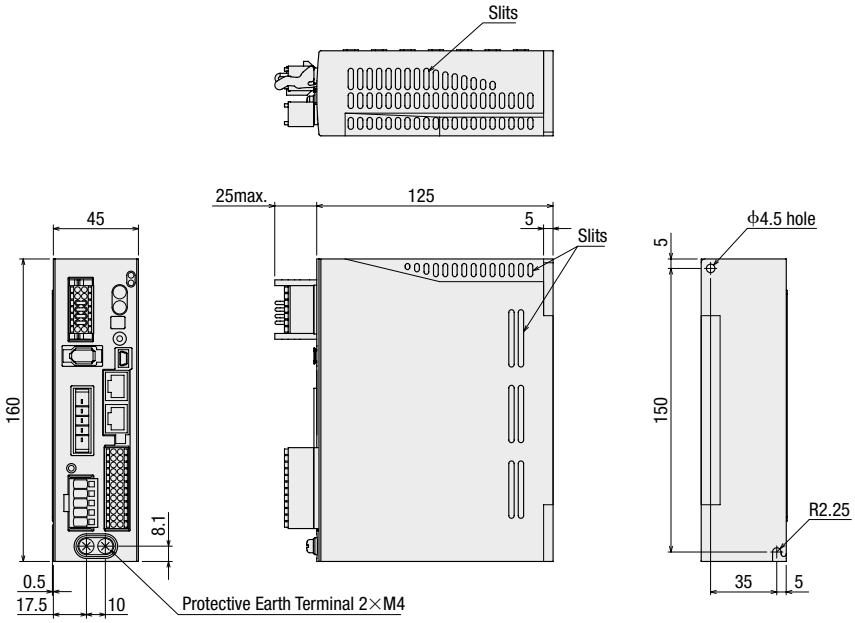

●Accessories

Connector for Main Power Supply/Regeneration Unit (CN4)
Connector: 05JFAT-SAXGDK-H5.0
(JST Mfg. Co., Ltd.)

Connector for Input/Output Signal (CN5)
Connector: DFMC1,5/12-ST-3,5
(PHOENIX CONTACT GmbH & Co. KG)

Connector for 24 VDC Power Supply Input/Regeneration Unit Thermal Input/Electromagnetic Brake Output Terminal (CN1)
Connector: DFMC1,5/7-ST-3,5-LR
(PHOENIX CONTACT GmbH & Co. KG)

Lever for Connector: J-FAT-0T
(JST Mfg. Co., Ltd.)

◇Pulse-Input Type

Driver Product Name: AZD-A, AZD-C
Mass: 0.65 kg

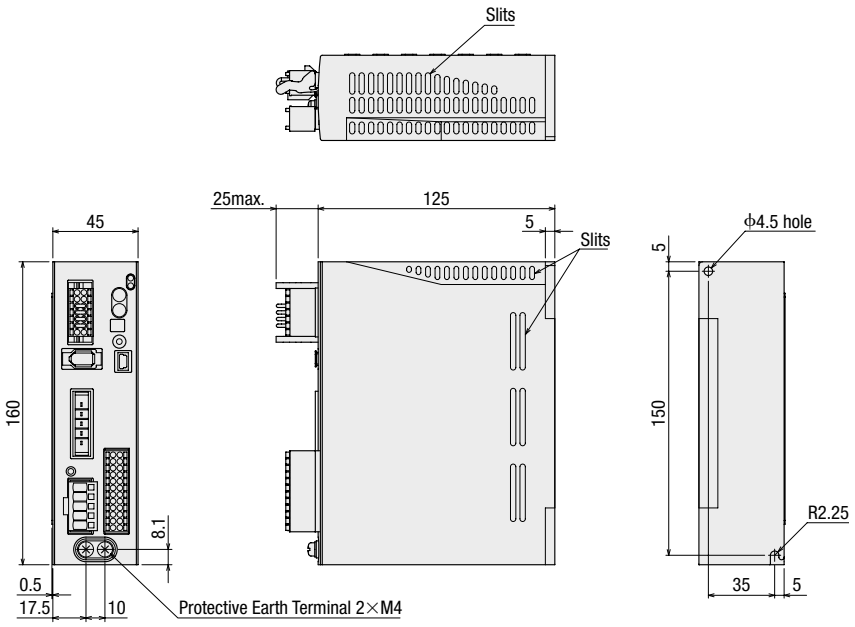

●Accessories

Connector for Main Power Supply/Regeneration Unit (CN4)
Connector: 05JFAT-SAXGDK-H5.0
(JST Mfg. Co., Ltd.)

Connector for Input/Output Signal (CN5)
Connector: DFMC1,5/12-ST-3,5
(PHOENIX CONTACT GmbH & Co. KG)

Connector for 24 VDC Power Supply Input/Regeneration Unit Thermal Input/Electromagnetic Brake Output Terminal (CN1)
Connector: DFMC1,5/7-ST-3,5-LR
(PHOENIX CONTACT GmbH & Co. KG)

Lever for Connector: J-FAT-0T
(JST Mfg. Co., Ltd.)

●Cable for Motor (sold separately), Cable for Encoder (sold separately), Cable for Electromagnetic Brake (sold separately)

●Only products with included connection cables

◇Cable for Motor

Cable Type	Length L (m)
Cable for Motor 1 m	1
Cable for Motor 2 m	2
Cable for Motor 3 m	3

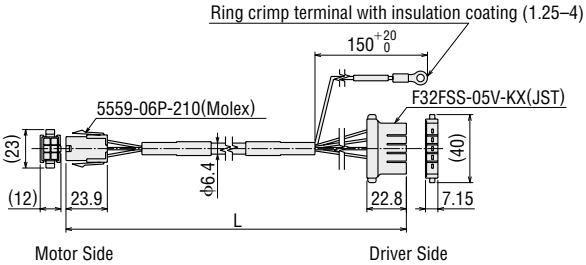

◇Cable for Encoder

Cable Type	Length L (m)
Cable for Encoder 1 m	1
Cable for Encoder 2 m	2
Cable for Encoder 3 m	3

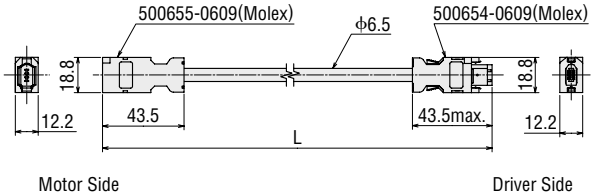

◇Cable for Electromagnetic Brake (Only for electromagnetic brake products)

Cable Type	Length L (m)
Cable for Electromagnetic Brake 1 m	1
Cable for Electromagnetic Brake 2 m	2
Cable for Electromagnetic Brake 3 m	3

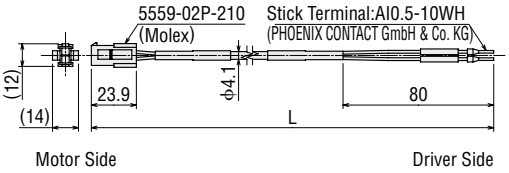

Notes

●The motor cable and the electromagnetic brake cable coming out of the motor cannot be connected directly to the driver. For connection to the driver use the accessory connection cable (sold separately) or the connection cable which is included to the product (for products with included cable).

Connection and Operation (Built-in Controller Type)

Name and Functions of Driver Parts

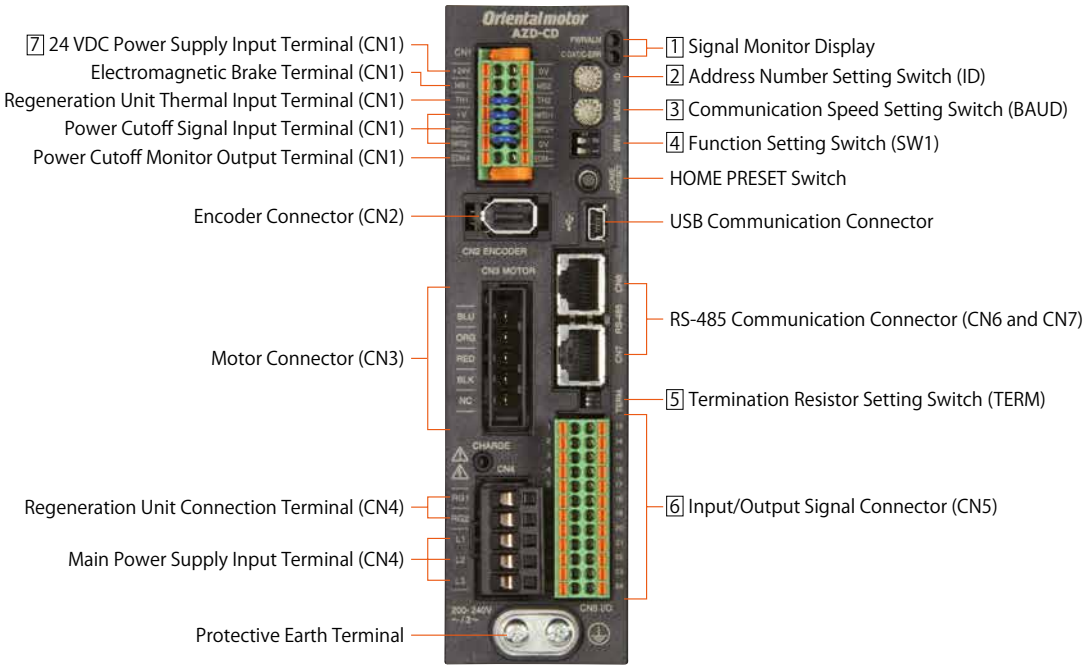

1 Signal Monitor Displays

◇LED Displays

Display	Colour	Function	When Activated
PWR	Green	Power Display	When 24 VDC power is on.
ALM	Red	Alarm Display	Blinks when protective functions are activated.
C-DAT	Green	Communication Display	When communication data is received or sent.
C-ERR	Red	Communication Error Display	When there is an error with communication data.

2 Address Number Setting Switch (ID)

Display	Function
ID	Set the address number for RS-485 communication (Factory Setting: 0).

3 Communication Speed Setting Switch

Display	Function
BAUD	Set this when using RS-485 communications. Set the communication speed (Factory Setting: 7).

4 Function Setting Switch

Display	No.	Function
SW1	1	This sets the address number in combination with the address number setting switch (ID) (Factory Setting: OFF).
	2	This sets the protocol for RS-485 communication (Factory Setting: OFF).

◇Settings of the RS-485 Communication Speed

No.	Baud Rate (bps)
0	9600
1	19200
2	38400
3	57600
4	115200
5	230400
6	Not used
7	Network Converter
8–F	Not used

5 Termination Resistor Setting Switch

Display	No.	Function
TERM	1	Set the RS-485 communication terminal resistor (120Ω) (Factory Setting: OFF) . OFF: no terminal resistor, ON: terminal resistor connected.
	2	

Please use the same settings for both No. 1 and No. 2.

6 Input/Output Signal Connector (CN5)

Display	Pin Number	Signal Name	Content	
CN5	1	IN0	START	This signal is used to start positioning operation.
	2	IN2	M1	Use the 3 bits of M0, M1, M2, to select the drive data No.
	3	IN4	ZHOME	Move to the home position set with the HOME PRESET switch.
	4	IN6	STOP	Stop the motor.
	5	IN-COM [0–7]*1	IN0~IN7 input common	
	6	IN8	FW-JOG	Start JOG operation.
	7	OUT0	HOME-END	Output when determining the home position or completing high speed return-to-home operation.
	8	OUT2	PLS-RDY	Not used
	9	OUT4	MOVE	Output while operating the motor.
	10	OUT-COM*1	Output common	
	11	ASG+	A phase pulse output+	
	12	BSG+	B phase pulse output+	
	13	IN1	M0	Use the 3 bits of M0, M1, M2, to select the drive data No.
	14	IN3	M2	Use the 3 bits of M0, M1, M2, to select the drive data No.
	15	IN5	FREE	The motor is set to non-excitation.
	16	IN7	ALM-RST	Reset the alarm.
	17	IN-COM [8-9]*1	IN8, IN9 input common	
	18	IN9	RV-JOG	Start JOG operation.
	19	OUT1	IN-POS	Output when the motor operation is complete.
	20	OUT3	READY	Output when the driver is ready for operation.
	21	OUT5	ALM-B	Output the driver alarm state (normal close).
	22	GND*1	Ground	
	23	ASG−	A phase pulse output −	
	24	BSG−	B phase pulse output −	

●Assigned functions are set by means of the parameter settings. The above is the initial value. For details, refer to the User's Manual.
*1 The initial value setting cannot be changed.

7 24 VDC Input/Electromagnetic Brake Connection Terminal/Regeneration Unit Thermal Input/Power Cutoff Signal Input Terminal/Power Cutoff Monitor Output Terminal (CN1)

Display	Input/Output	Terminal Name	Content
+24 V	Input	24 VDC Power Input Terminal+	This is the driver control circuit power. Be sure to connect this.
0 V		24 VDC Power Input Terminal−	
MB1	Output	Electromagnetic Brake Connection Terminal−	Connect the cable for Electromagnetic Brake Connection Terminal.
MB2		Electromagnetic Brake Connection Terminal+	
TH1	Input	Regeneration Unit Thermal Input Terminal	Connect the optional regenerative resistance (**RGB100**) (sold separately). When not connecting the regenerative resistance, short circuit between the terminals (RGB100).
TH2		Regeneration Unit Thermal Input Terminal	
HWTO1+	Input	Drive Cutoff Signal Input Terminal 1+	Connect the switch and programmable controller. When either HWTO1 input or HWTO2 input is OFF, the electricity to the motor is cut directly by hardware without the CPU.
HWTO1−		Drive Cutoff Signal Input Terminal 1−	
HWTO2+		Drive Cutoff Signal Input Terminal 2+	
HWTO2−		Drive Cutoff Signal Input Terminal 2−	
EDM+	Output	Drive Cutoff Signal Input Terminal+	Connect the programmable controller. When both HWTO1 input and HWTO2 input are OFF, EDM output becomes ON.
EDM−		Drive Cutoff Signal Input Terminal−	

Connection Diagram

◇Connection to Peripheral Equipment

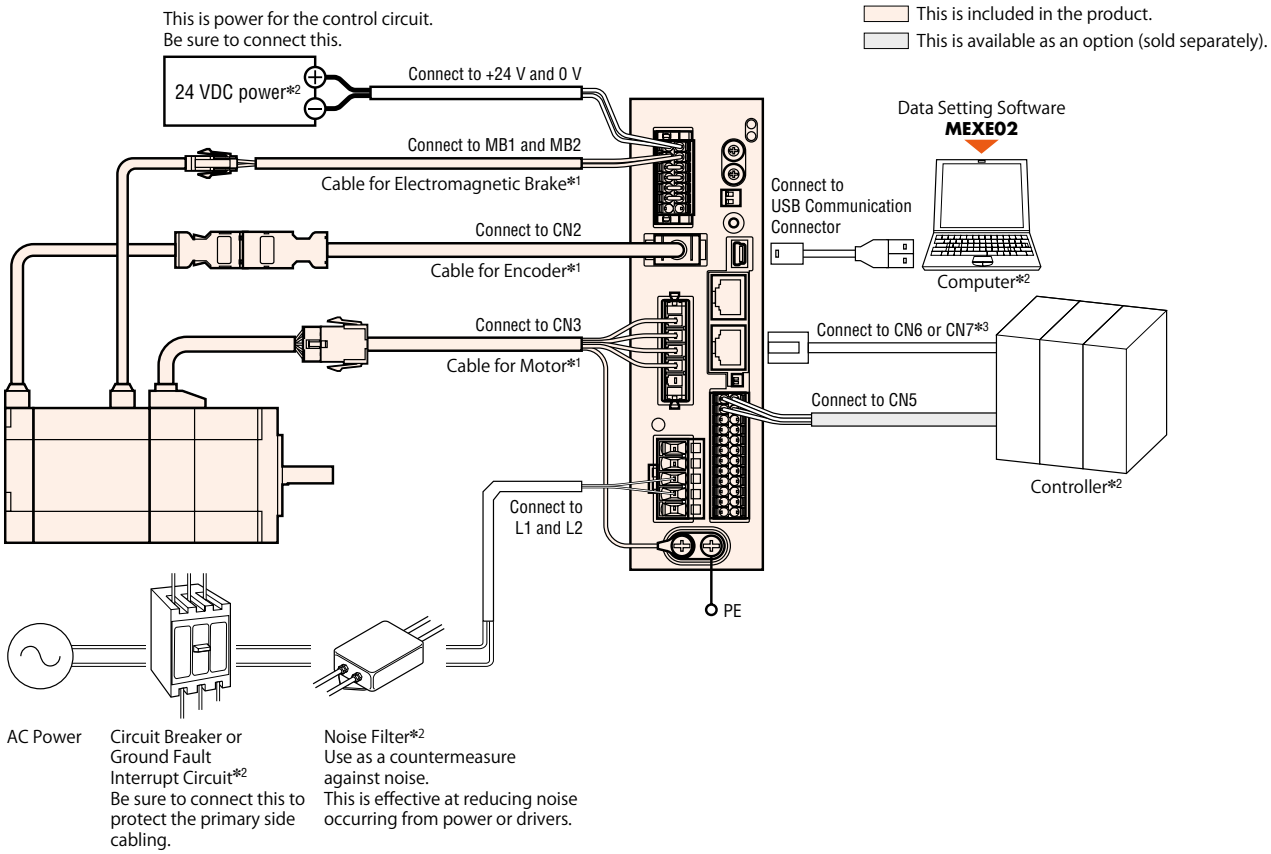

*1 Products with cable for connecting between motor and driver (1 m, 2 m, 3 m) are available as well as those to which such cable is not attached.
Cables longer than 3 m or flexible cables can be selected as an option (sold separately).
Make sure a cabling distance between the motor and the driver is 20 m or less.
*2 Prepared by the customer.
*3 When controlling with RS-485 communications, connect to the controller.

◇Connecting a Main Power Supply

The connection method differs according to the power supply specification.

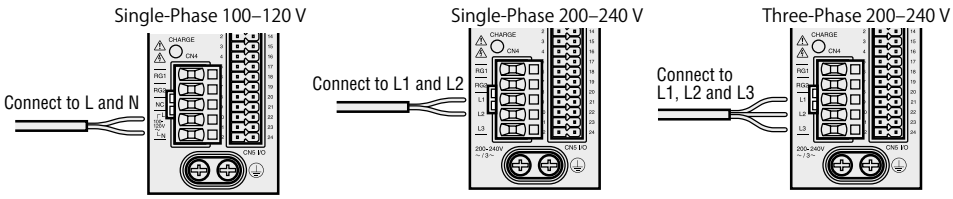

◇USB Cable Connection

The computer on which the data setting software **MEXE02** is installed and driver are connected with a USB cable.
Use the following specifications for the USB cable.

Specification	USB2.0 (full speed)
Cable	Length: 3 m (or less)
	Format: A-mini-B

◇Connecting to a Host Controller

•Connecting to a Current Sink Output Circuit

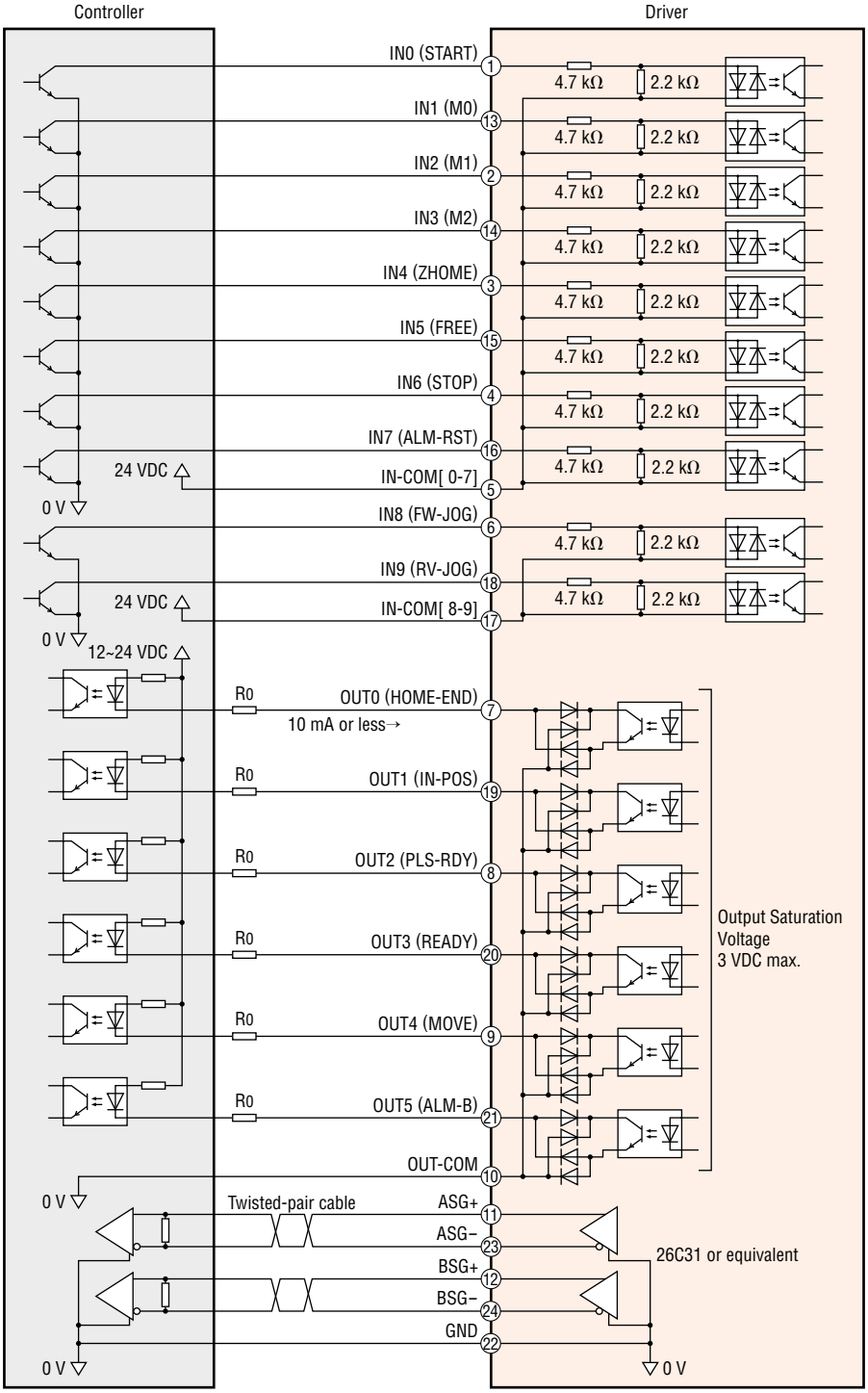

Notes

- For the input signal, use 24 VDC.
- For the output signal, use 12~24 VDC 10 mA or less. Where the current value exceeds 10 mA, connect an external resistor R_0 to reduce the current to 10 mA or less.
- Make sure the signal line is wired at a distance of 200 mm or longer from the power lines (power supply line and motor line).
  Further, do not insert the signal line in the same pipe as the power lines or bundle them together.
- When noise is emitted from the motor cable or power cable due to wiring or allocation and it cause a problem, use shields or ferrite cores.

◇Connecting to a Host Controller

•Connecting to a Current Source Output Circuit

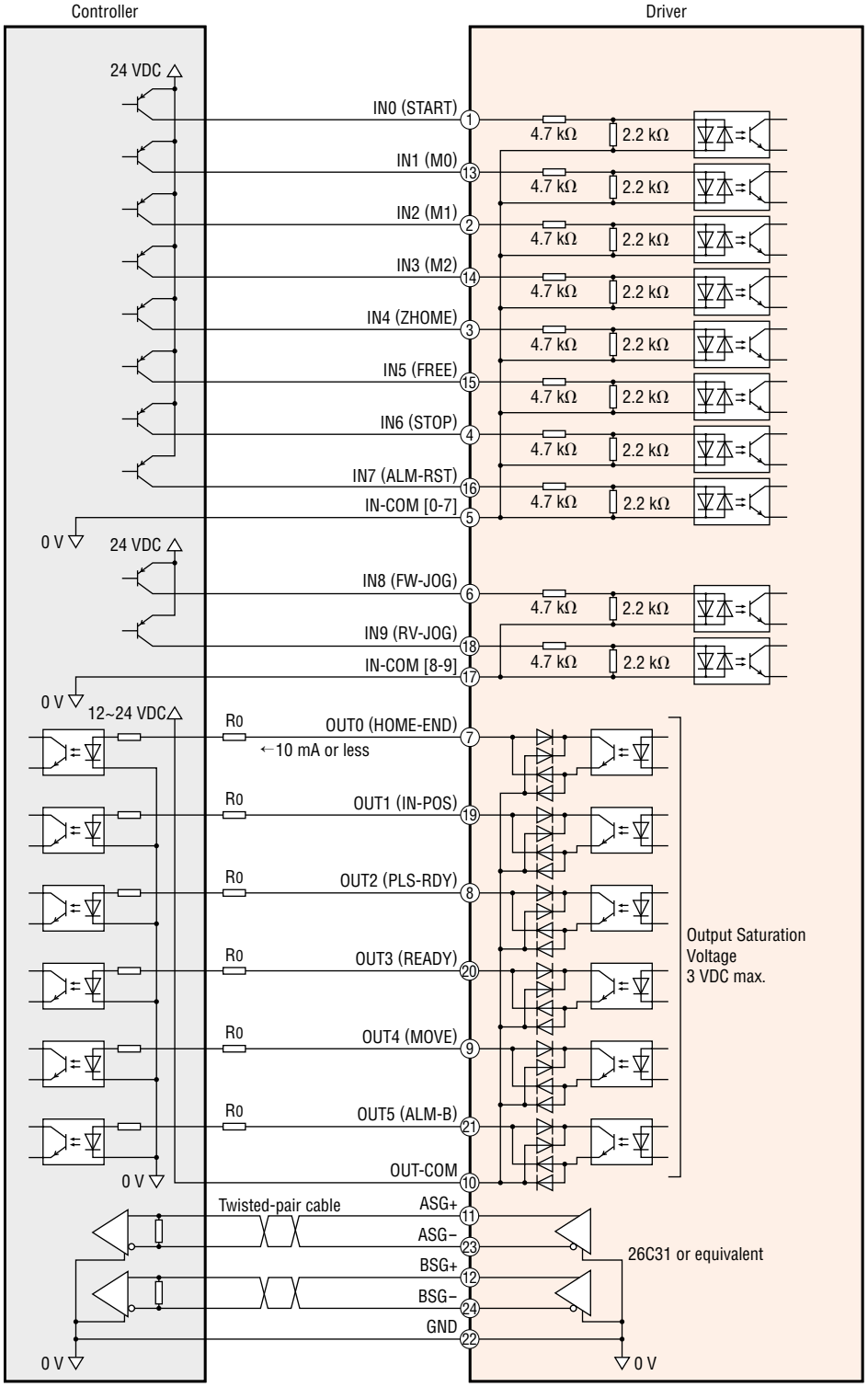

Notes

- For the input signal, use 24 VDC.
- For the output signal, use 12~24 VDC 10 mA or less. Where the current value exceeds 10 mA, connect an external resistor R_0 to reduce the current to 10 mA or less.
- Make sure the signal line is wired at a distance of 200 mm or longer from the power line (power supply line and motor line).
  Further, do not insert the signal line in the same pipe as the power lines or bundle them together.
- When noise is emitted from the motor cable or power cable due to wiring or allocation and it cause a problem, use shields or ferrite cores.

Connection and Operation (Pulse-Input Type)

Names and Functions of Driver Parts

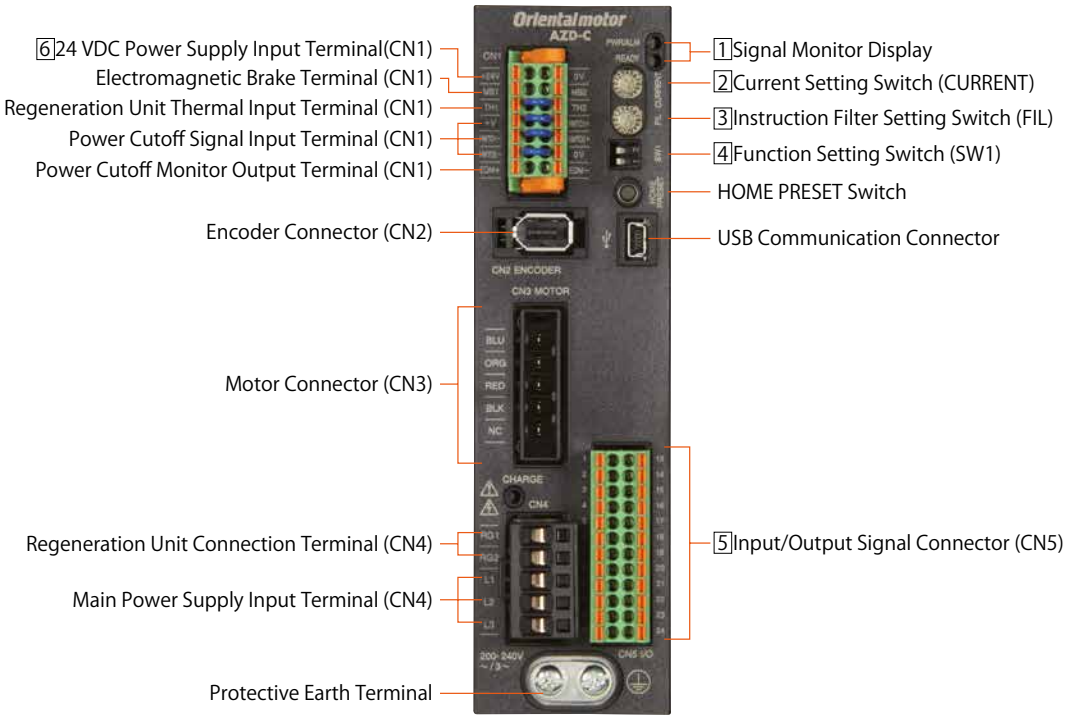

1 Signal Monitor Displays

◇LED Display

Display	Colour	Function	When Activated
PWR	Green	Power Display	When 24 VDC power is on.
ALM	Red	Alarm Display	Blinks when protective functions are activated.
READY	Green	READY Output	When READY output is set to ON.

2 Current Setting Switch

Display	Function
CURRENT	Set basic current that is the base for the operation current and stop current (Factory Setting: F).

3 Command Filter Setting Switch

Display	Function
FIL	Adjust the responsiveness of the motor (Factory Setting: 1).

4 Function Setting Switch

Display	No.	Function
SW1	1	Sets the resolution per one rotation of the motor output shaft: OFF [1000 p/r] (Factory Setting); ON [10000 p/r]
	2	Sets the pulse input format to 1 pulse input mode or 2 pulse input mode. (Factory Setting: OFF[2 pulse input mode])

5 Input/Output Signal Connector (CN5)

Display	Pin Number	Signal Name	Content	
CN5	1	CW+[PLS+]*1	CW pulse input+[pulse input+]	
	2	CCW+[DIR+]*1	CCW pulse input+[rotation direction input+]	
	3	IN4	ZHOME	Move to the home position set with the HOME PRESET switch.
	4	IN6	STOP	Stop the motor.
	5	IN-COM [4–7]*1	IN4–IN7 input common	
	6	IN8	FW-JOG	Start JOG operation.
	7	OUT0	HOME-END	Output when determining the home position or completing high speed return-to-home operation.
	8	OUT2	PLS-RDY	Output when the pulse input preparation is complete.
	9	OUT4	MOVE	Output while operating the motor.
	10	OUT-COM*1	Output common	
	11	ASG+	A phase pulse output+	
	12	BSG+	B phase pulse output+	
	13	CW−[PLS-]*1	CW pulse input−[pulse input−]	
	14	CCW−[DIR-]*1	CCW pulse input−[rotation direction input −]	
	15	IN5	FREE	The motor is set to non-excitation.
	16	IN7	ALM-RST	Reset the alarm.
	17	IN-COM [8–9]*1	IN8, IN9 input common	
	18	IN9	RV-JOG	Start JOG operation.
	19	OUT1	IN-POS	Output when the motor operation is complete.
	20	OUT3	READY	Outputs when the driver is ready for operation.
	21	OUT5	ALM-B	Output the driver alarm state (normal close).
	22	GND*1	Ground	
	23	ASG−	A phase pulse output−	
	24	BSG−	B phase pulse output−	

●Assigned functions are set by means of the parameter settings. The above is the initial value. For details, refer to the User's Manual.
*1 The initial value setting cannot be changed.

6 24 VDC Assigned functions are set by means of the parameter settings. The above is the initial value. For details, refer to the User's Manual. (CN1)

Display	Input/Output	Terminal Name	Content
+24 V	Input	24 VDC Power Input Terminal+	This is the driver control circuit power. Be sure to connect this.
0 V		24 VDC Power Input Terminal−	
MB1	Output	Electromagnetic Brake Terminal−	Connect the cable for electromagnetic brake of the electromagnetic brake type motor.
MB2		Electromagnetic Brake Terminal+	
TH1	Input	Regeneration Unit Thermal Input Terminal	Connect the optional regenerative resistance (**RGB100**) (sold separately). When not connecting the regenerative resistance, short circuit between the terminals (RGB100).
TH2		Regeneration Unit Thermal Input Terminal	
HWTO1+	Input	Drive Cutoff Signal Input Terminal 1+	Connect the switch and programmable controller. When either HWTO1 input or HWTO2 input is OFF, the electricity to the motor is cut directly by hardware without the CPU.
HWTO1−		Drive Cutoff Signal Input Terminal 1−	
HWTO2+		Drive Cutoff Signal Input Terminal 2+	
HWTO2−		Drive Cutoff Signal Input Terminal 2−	
EDM+	Output	Drive Cutoff Monitor Output Terminal+	Connect the programmable controller. When both HWTO1 input and HWTO2 input are OFF, EDM output becomes ON.
EDM−		Drive Cutoff Monitor Output Terminal−	

Connection Diagram

◇Connection to Peripheral Equipment

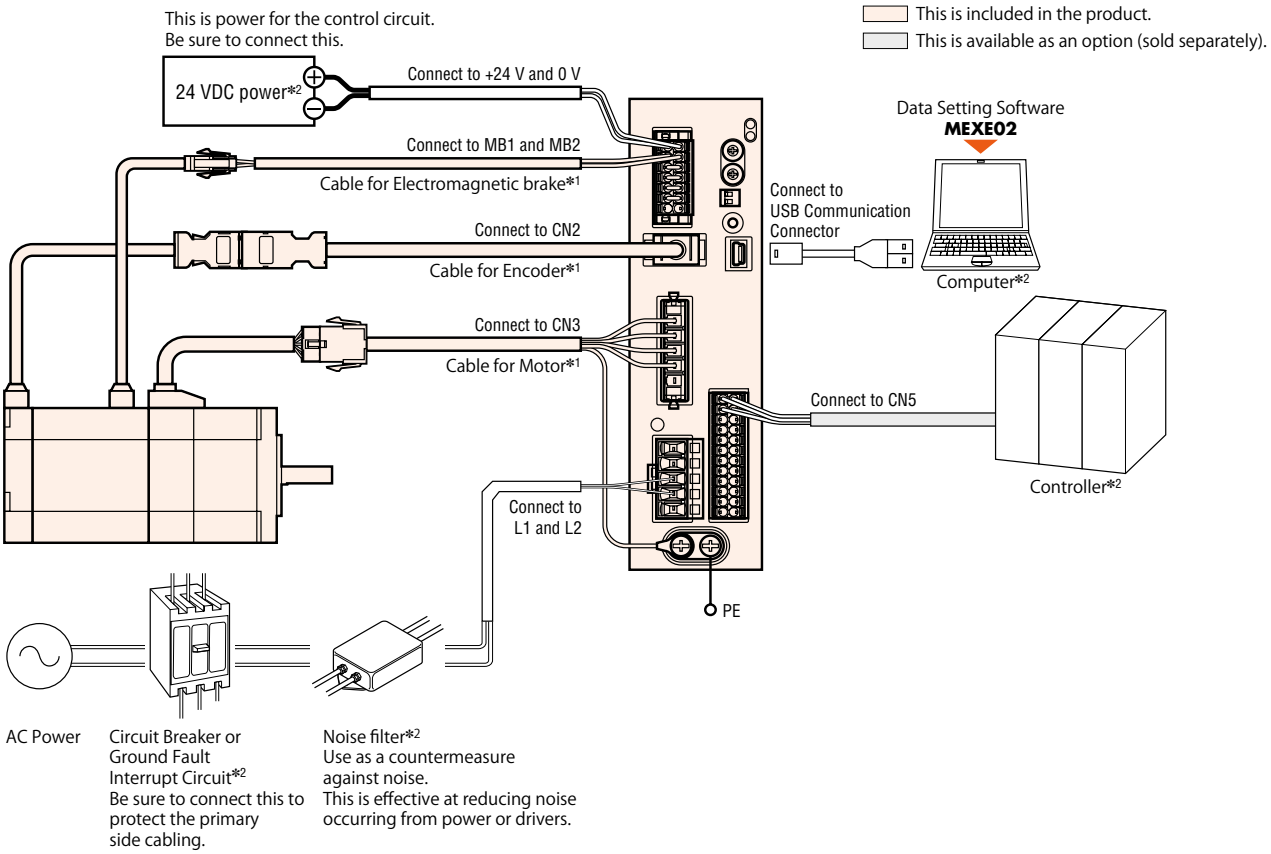

*1 Products with cable for connecting between motor and driver (1 m, 2 m, 3 m) are available as well as those to which such cable is not attached.
Cables longer than 3 m or flexible cables can be selected as an option (sold separately).
Make sure a cabling distance between the motor and the driver is 20 m or less.

*2 Prepared by the customer.

◇Connecting a Main Power Supply

The connection method differs according to the power supply specification.

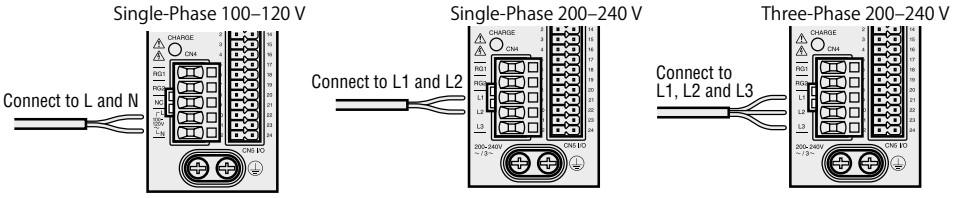

◇USB Cable Connection

The computer on which the data setting software **MEXE02** is installed and driver are connected with a USB cable.
Use the following specifications for the USB cable.

Specification	USB2.0 (full speed)
Cable	Length: 3 m (or less)
	Format: A-mini-B

◇Connecting to a Host Controller

•Connecting to a Current Sink Output Circuit

When the pulse input is a line driver

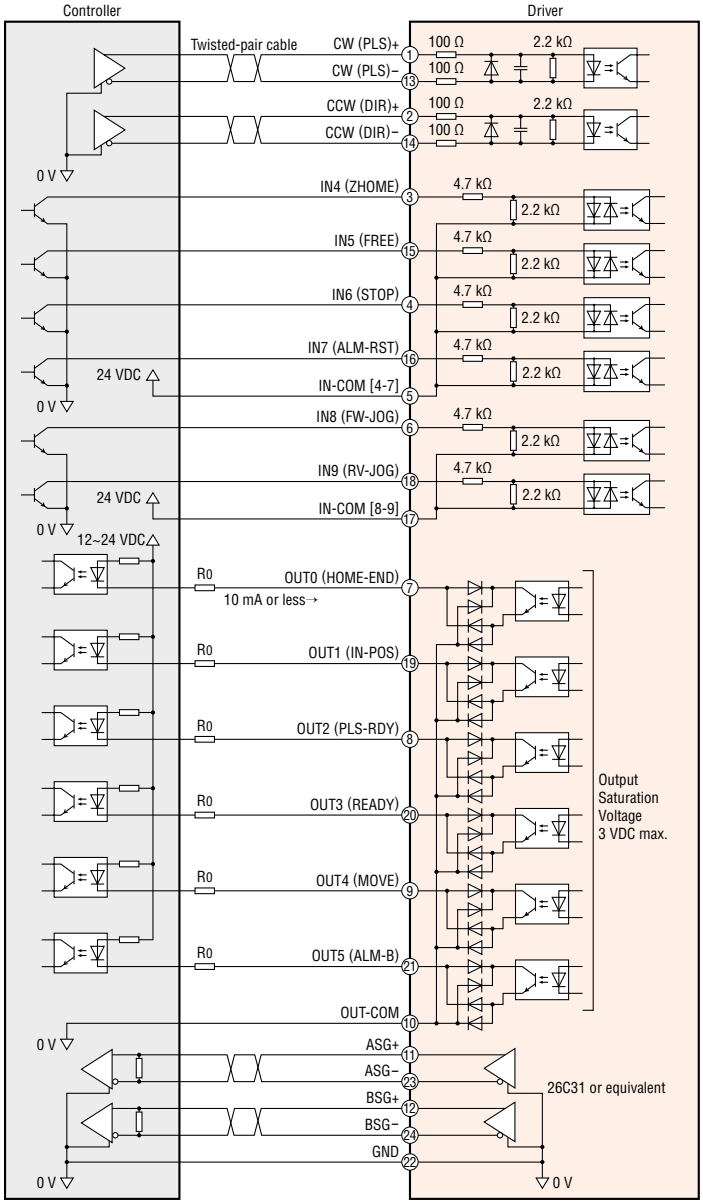

Notes

- For the input signal, use 24 VDC.
- For the output signal, use 12~24 VDC 10 mA or less. Where the current value exceeds 10 mA, connect the external resistance R_0 to reduce the current to 10 mA or less.
- Make sure the signal line is wired at a distance of 200 mm or longer from the power line (power supply line and motor line).
  Furthermore, do not insert the signal line in the same pipe as the power lines or bundle them together.
- When noise is emitted from the motor cable or power cable due to wiring or allocation and it cause a problem, use shields or ferrite cores.

When the pulse input is an open collector

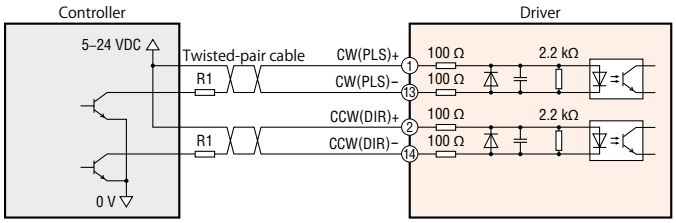

Notes

- For CW (PLS) input and CCW (DIR) input, use 5~24 VDC. Where the voltage exceeds 5 VDC, connect the external resistance R_1 to adjust the input current to be 7~20 mA.

◇Connecting to a Host Controller

•Connecting to a Current Source Output Circuit

When the pulse input is a line driver

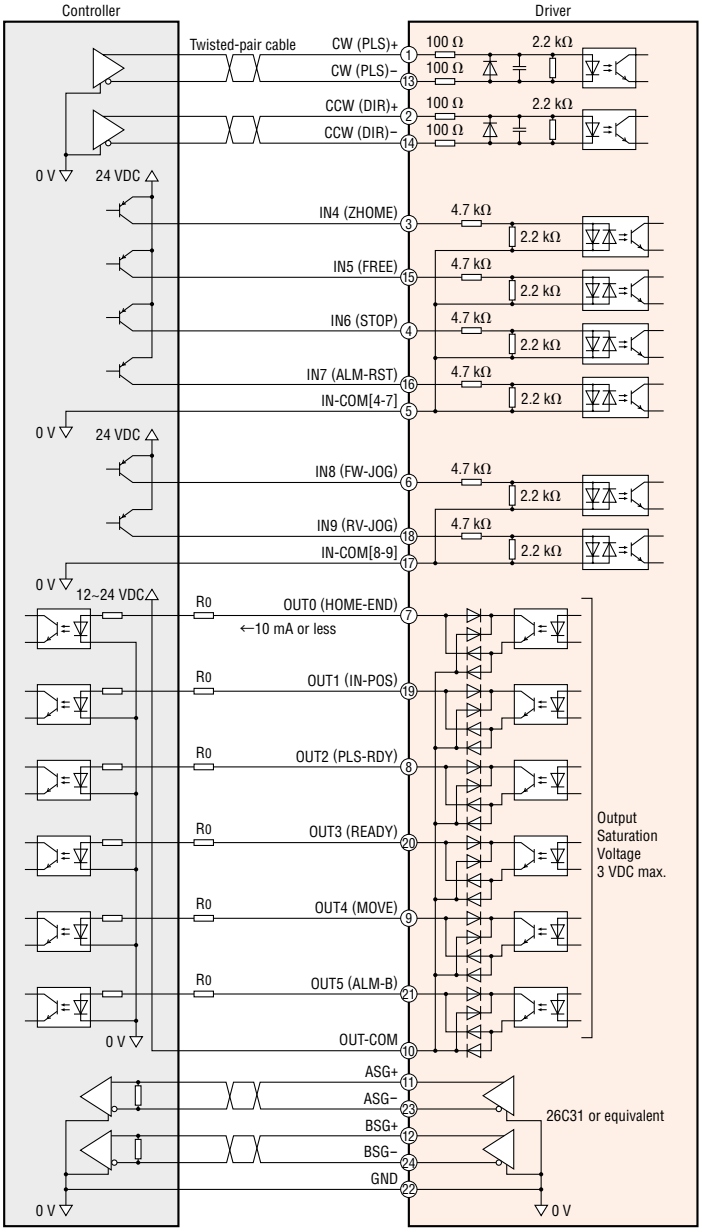

Notes

- For the input signal, use 24 VDC.
- For the output signal, use 12~24 VDC 10 mA or less. Where the current value exceeds 10 mA, connect to external resistance R_0 to reduce the current to 10 mA or less.
- Make sure the signal line is wired at a distance of 200 mm or longer from the power line (power supply line and motor line).
  Furthermore, do not insert the signal line in the same pipe as the power lines or bundle them together.
- When noise is emitted from the motor cable or power cable due to wiring or allocation and it cause a problem, use shields or ferrite cores.

When the pulse input is an open collector

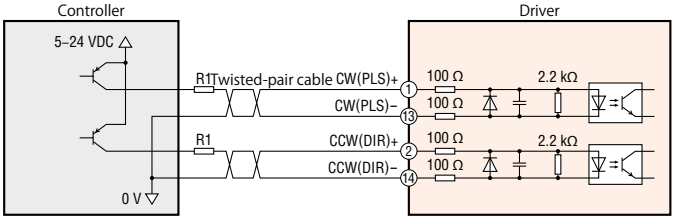

Notes

- For CW (PLS) input and CCW (DIR) input, use 5~24 VDC. Where the voltage exceeds 5 VDC, connect the external resistance R_1 to adjust the input current to be 7~20 mA.

Motor and Driver Combinations

The product names for the motors and drivers comprising a unit are as follows.

Built-in Controller Type

Type	Product Name	Motor Product Name	Driver Product Name
Standard Type	**AZ46□□D-◇**	AZM46□C	AZD-□D
	AZ66□□D-◇	AZM66□C	
	AZ69□□D-◇	AZM69□C	
	AZ98□□D-◇	AZM98□C	
	AZ911A□D-◇	AZM911AC	
TS Geared Type	**AZ46□□D-TS■-◇**	AZM46□C-TS■	
	AZ66□□D-TS■-◇	AZM66□C-TS■	
	AZ98□□D-TS■-◇	AZM98□C-TS■	
PS Geared Type	**AZ46□□D-PS■-◇**	AZM46□C-PS■	
	AZ66□□D-PS■-◇	AZM66□C-PS■	
	AZ98□□D-PS■-◇	AZM98□C-PS■	
HPG Geared Type	**AZ46□□D-HP■-◇**	AZM46□C-HP■	
	AZ46□□D-HP■F-◇	AZM46□C-HP■F	
	AZ66□□D-HP■-◇	AZM66□C-HP■	
	AZ66□□D-HP■F-◇	AZM66□C-HP■F	
	AZ98□□D-HP■-◇	AZM98□C-HP■	
	AZ98□□D-HP■F-◇	AZM98□C-HP■F	
Harmonic Geared Type	**AZ46□□D-HS■-◇**	AZM46□C-HS■	
	AZ66□□D-HS■-◇	AZM66□C-HS■	
	AZ98□□D-HS■ -◇	AZM98□C-HS■	

Pulse-Input Type

Type	Product Name	Motor Product Name	Driver Product Name
Standard Type	**AZ46□□-◇**	AZM46□C	AZD-□
	AZ66□□-◇	AZM66□C	
	AZ69□□-◇	AZM69□C	
	AZ98□□-◇	AZM98□C	
	AZ911A□-◇	AZM911AC	
TS Geared Type	**AZ46□□-TS■-◇**	AZM46□C-TS■	
	AZ66□□-TS■-◇	AZM66□C-TS■	
	AZ98□□-TS■-◇	AZM98□C-TS■	
PS Geared Type	**AZ46□□-PS■-◇**	AZM46□C-PS■	
	AZ66□□-PS■-◇	AZM66□C-PS■	
	AZ98□□-PS■-◇	AZM98□C-PS■	
HPG Geared Type	**AZ46□□-HP■-◇**	AZM46□C-HP■	
	AZ46□□-HP■F-◇	AZM46□C-HP■F	
	AZ66□□-HP■-◇	AZM66□C-HP■	
	AZ66□□-HP■F-◇	AZM66□C-HP■F	
	AZ98□□-HP■-◇	AZM98□C-HP■	
	AZ98□□-HP■F-◇	AZM98□C-HP■F	
Harmonic Geared Type	**AZ46□□-HS■-◇**	AZM46□C-HS■	
	AZ66□□-HS■-◇	AZM66□C-HS■	
	AZ98□□-HS■-◇	AZM98□C-HS■	

The □ within the product name includes **A** (single axis shaft) or **M** (electromagnetic brake) expressing the format.
Either **A** (single-phase 100-120 VAC) or **C** (single-phase/three-phase 200-240 VAC) indicating the power supply input is entered where the box □ is located within the product name.
The ■within the product name includes a number expressing the gear ratio.
A number indicating the desired length of **1** (1 m), **2** (2 m) or **3** (3 m) is entered where the box ◇ is located within the product name when the cable is included with the product.

System Configuration

Built-in Controller Type with Electromagnetic Brake

Configuration example when using I/O control or RS-485 communications.

*1 Prepared by the customer.
*2 Only products to which the connection cables are attached.

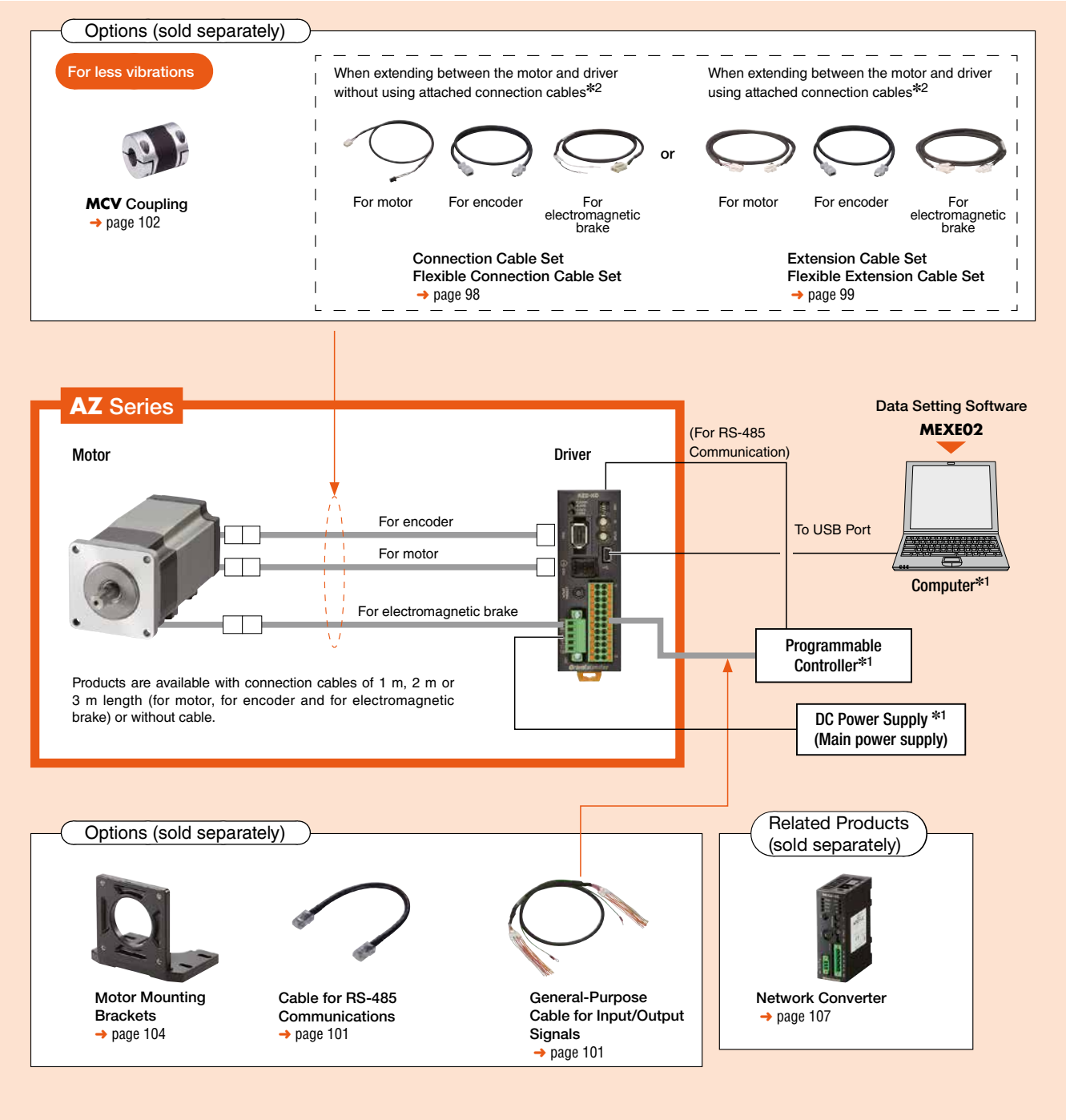

System Configuration Example

AZ Series	+	Sold Separately		
		Motor Mounting Bracket	Flexible Coupling	General-Purpose Cable (1 m)
AZ66MKD-3		PAL2P-5	MCV251010	CC16D010B-1

The system configuration described above is just an example. Other combinations are available.

Pulse-Input Type with Electromagnetic Brake

A single-axis system configuration with the **SCX11** Series controller is shown below.

*1 Prepared by the customer.
*2 Only products to which the connection cables are attached.

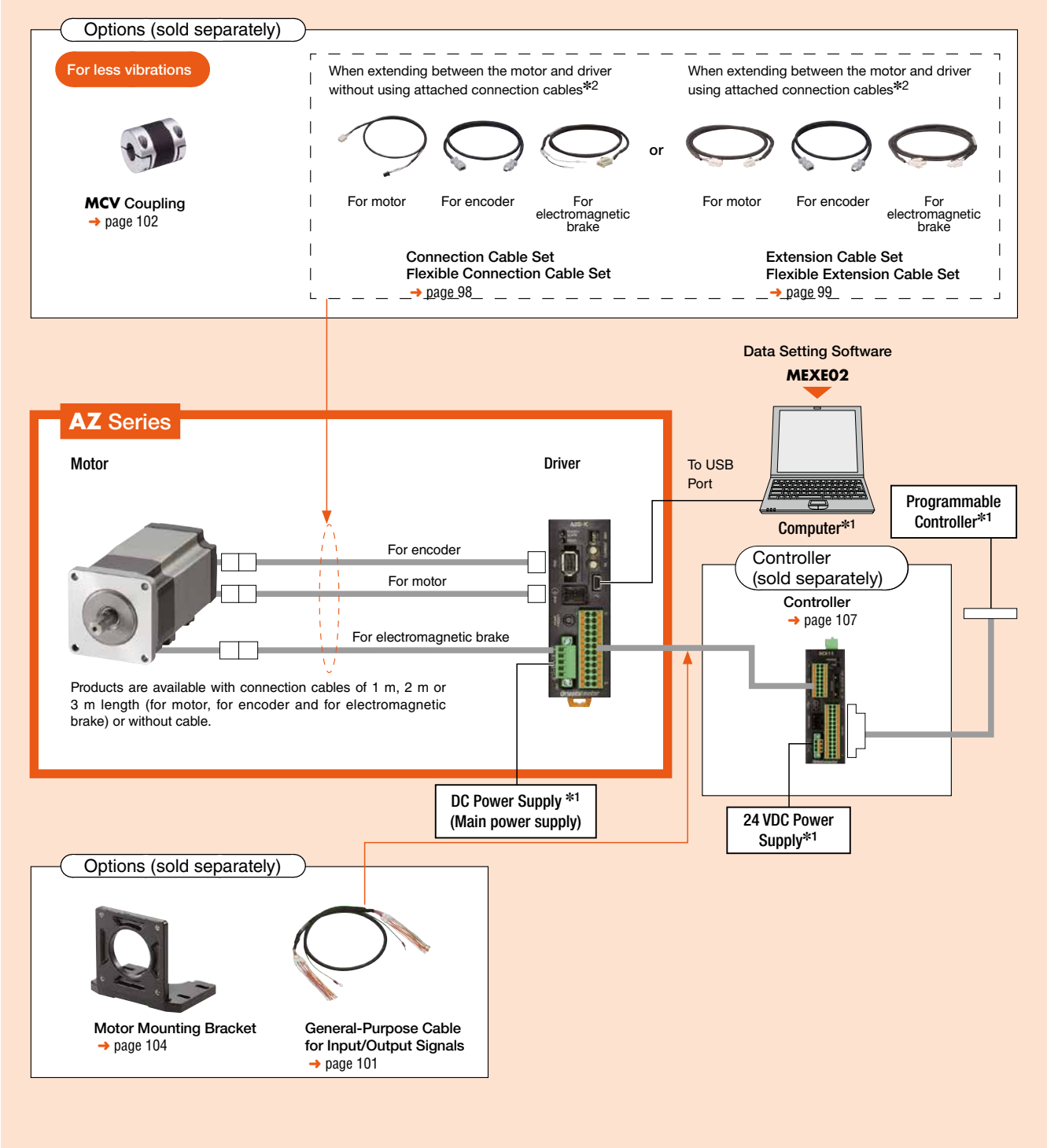

System Configuration Example

AZ Series	+	Sold Separately			
		Controller	Motor Mounting Bracket	Flexible Coupling	General-Purpose Cable (1 m)
AZ66MK-3		SCX11	PAL2P-5	MCV251010	CC16D010B-1

The system configuration described above is just an example. Other combinations are available.

Product Number Code

Standard Type

AZ 6 6 A K D - 1

① ② ③ ④ ⑤ ⑥ ⑩

Geared Types

AZ 6 6 A K D - HP 15 F - 1

① ② ③ ④ ⑤ ⑥ ⑦ ⑧ ⑨ ⑩

①	Series Name	**AZ**: **AZ** Series
②	Motor Frame Size	**1**: 20 mm **2**: 28 mm **4**: 42mm (**HPG** Geared Type is 40 mm) **6**: 60 mm
③	Motor Case Length	
④	Configuration	**A**: Single Shaft **M**: With Electromagnetic Brake
⑤	Power Supply Input	**K**: 24 VDC Power Supply
⑥	Driver Type	**D**: Built-in Controller Type None: Pulse-Input Type
⑦	Geared Type	**TS**: **TS** Geared Type **PS**: **PS** Geared Type **HP**: **HPG** Geared Type **HS**: Harmonic Geared Type
⑧	Gear Ratio	
⑨	Output Shaft Type	**HPG** Geared Type None: Shaft Output **F**: Flange Output
⑩	Connection Cables	Figures: Included Connection Cable Length **1** : 1m **2** : 2m **3** : 3m None: Connection Cable not included

Product Line

Built-in Controller Type

◇Standard Type

Product Name
AZ14AKD-◇
AZ15AKD-◇
AZ24AKD-◇
AZ26AKD-◇
AZ46AKD-◇
AZ66AKD-◇
AZ69AKD-◇

◇**TS** Geared Type

Product Name
AZ46AKD-TS3.6-◇
AZ46AKD-TS7.2-◇
AZ46AKD-TS10-◇
AZ46AKD-TS20-◇
AZ46AKD-TS30-◇
AZ66AKD-TS3.6-◇
AZ66AKD-TS7.2-◇
AZ66AKD-TS10-◇
AZ66AKD-TS20-◇
AZ66AKD-TS30-◇

◇Standard Type with Electromagnetic Brake

Product Name
AZ46MKD-◇
AZ66MKD-◇
AZ69MKD-◇

◇**TS** Geared Type with Electromagnetic Brake

Product Name
AZ46MKD-TS3.6-◇
AZ46MKD-TS7.2-◇
AZ46MKD-TS10-◇
AZ46MKD-TS20-◇
AZ46MKD-TS30-◇
AZ66MKD-TS3.6-◇
AZ66MKD-TS7.2-◇
AZ66MKD-TS10-◇
AZ66MKD-TS20-◇
AZ66MKD-TS30-◇

◇**PS** Geared Type

Product Name
AZ46AKD-PS5-◇
AZ46AKD-PS7.2-◇
AZ46AKD-PS10-◇
AZ46AKD-PS25-◇
AZ46AKD-PS36-◇
AZ46AKD-PS50-◇
AZ66AKD-PS5-◇
AZ66AKD-PS7.2-◇
AZ66AKD-PS10-◇
AZ66AKD-PS25-◇
AZ66AKD-PS36-◇
AZ66AKD-PS50-◇

◇**PS** Geared Type with Electromagnetic Brake

Product Name
AZ46MKD-PS5-◇
AZ46MKD-PS7.2-◇
AZ46MKD-PS10-◇
AZ46MKD-PS25-◇
AZ46MKD-PS36-◇
AZ46MKD-PS50-◇
AZ66MKD-PS5-◇
AZ66MKD-PS7.2-◇
AZ66MKD-PS10-◇
AZ66MKD-PS25-◇
AZ66MKD-PS36-◇
AZ66MKD-PS50-◇

◇**HPG** Geared Type

Product Name
AZ46AKD-HP5-◇
AZ46AKD-HP5F-◇
AZ46AKD-HP9-◇
AZ46AKD-HP9F-◇
AZ66AKD-HP5-◇
AZ66AKD-HP5F-◇
AZ66AKD-HP15-◇
AZ66AKD-HP15F-◇

◇**HPG** Geared Type with Electromagnetic Brake

Product Name
AZ46MKD-HP5-◇
AZ46MKD-HP5F-◇
AZ46MKD-HP9-◇
AZ46MKD-HP9F-◇
AZ66MKD-HP5-◇
AZ66MKD-HP5F-◇
AZ66MKD-HP15-◇
AZ66MKD-HP15F-◇

◇Harmonic Geared Type

Product Name
AZ46AKD-HS50-◇
AZ46AKD-HS100-◇
AZ66AKD-HS50-◇
AZ66AKD-HS100-◇

◇Harmonic Geared Type with Electromagnetic Brake

Product Name
AZ46MKD-HS50-◇
AZ46MKD-HS100-◇
AZ66MKD-HS50-◇
AZ66MKD-HS100-◇

- A number indicating the desired length of **1** (1 m), **2** (2 m) or **3** (3 m) is entered where the box ◇ is located within the product name when the cable is included with the product.

The following items are included in each product.

Motor, Parallel Key*1, Motor Installation Screws*2, Driver, Cable for Motor *3, Cable for Encoder*3, Cable for Electromagnetic Brake (units with electromagnetic brake only)*3, Driver Connector Set and Operating Manual

*1 Only for products with a key slot on the output shaft.

*2 **TS** geared type with frame sizes 60 mm only.

*3 Only products where connection cables are included. Accessory cables (sold separately) must be purchased in the following situations:

- When using a flexible cable
- When using a cable longer than 3 m
- When purchasing a product without cable

Notes

- The motor cable and electromagnetic brake cable from the motor cannot be connected directly to the driver. When connecting to a driver, use the accessory connection cable (sold separately) or use the included connection cable.

●Pulse-Input Type

◇Standard Type

Product Name
AZ14AK-◇
AZ15AK-◇
AZ24AK-◇
AZ26AK-◇
AZ46AK-◇
AZ66AK-◇
AZ69AK-◇

◇Standard Type with Electromagnetic Brake

Product Name
AZ46MK-◇
AZ66MK-◇
AZ69MK-◇

◇**TS** Geared Type

Product Name
AZ46AK-TS3.6-◇
AZ46AK-TS7.2-◇
AZ46AK-TS10-◇
AZ46AK-TS20-◇
AZ46AK-TS30-◇
AZ66AK-TS3.6-◇
AZ66AK-TS7.2-◇
AZ66AK-TS10-◇
AZ66AK-TS20-◇
AZ66AK-TS30-◇

◇**TS** Geared Type with Electromagnetic Brake

Product Name
AZ46MK-TS3.6-◇
AZ46MK-TS7.2-◇
AZ46MK-TS10-◇
AZ46MK-TS20-◇
AZ46MK-TS30-◇
AZ66MK-TS3.6-◇
AZ66MK-TS7.2-◇
AZ66MK-TS10-◇
AZ66MK-TS20-◇
AZ66MK-TS30-◇

◇**PS** Geared Type

Product Name
AZ46AK-PS5-◇
AZ46AK-PS7.2-◇
AZ46AK-PS10-◇
AZ46AK-PS25-◇
AZ46AK-PS36-◇
AZ46AK-PS50-◇
AZ66AK-PS5-◇
AZ66AK-PS7.2-◇
AZ66AK-PS10-◇
AZ66AK-PS25-◇
AZ66AK-PS36-◇
AZ66AK-PS50-◇

◇**PS** Geared Type with Electromagnetic Brake

Product Name
AZ46MK-PS5-◇
AZ46MK-PS7.2-◇
AZ46MK-PS10-◇
AZ46MK-PS25-◇
AZ46MK-PS36-◇
AZ46MK-PS50-◇
AZ66MK-PS5-◇
AZ66MK-PS7.2-◇
AZ66MK-PS10-◇
AZ66MK-PS25-◇
AZ66MK-PS36-◇
AZ66MK-PS50-◇

◇HPG Geared Type

Product Name
AZ46AK-HP5-◇
AZ46AK-HP5F-◇
AZ46AK-HP9-◇
AZ46AK-HP9F-◇
AZ66AK-HP5-◇
AZ66AK-HP5F-◇
AZ66AK-HP15-◇
AZ66AK-HP15F-◇

◇HPG Geared Type with Electromagnetic Brake

Product Name
AZ46MK-HP5-◇
AZ46MK-HP5F-◇
AZ46MK-HP9-◇
AZ46MK-HP9F-◇
AZ66MK-HP5-◇
AZ66MK-HP5F-◇
AZ66MK-HP15-◇
AZ66MK-HP15F-◇

◇Harmonic Geared Type

Product Name
AZ46AK-HS50-◇
AZ46AK-HS100-◇
AZ66AK-HS50-◇
AZ66AK-HS100-◇

◇Harmonic Geared Type with Electromagnetic Brake

Product Name
AZ46MK-HS50-◇
AZ46MK-HS100-◇
AZ66MK-HS50-◇
AZ66MK-HS100-◇

- A number indicating the desired length of **1** (1 m), **2** (2 m) or **3** (3 m) is entered where the box ◇ is located within the product name when the cable is included with the product.

The following are included in each product.

Motor, Parallel Key*1, Motor Installation Screws*2, Driver, Cable for Motor *3, Cable for Encoder*3, Cable for Electromagnetic Brake (units with electromagnetic brake only)*3, Driver Connector Set and Operating Manual

*1 Only for products with a key slot on the output shaft.

*2 **TS** geared type with frame size 60mm only.

*3 Only products where connection cables are included. Accessory cables (sold separately) must be purchased in the following situations:

- When using a flexible cable
- When using a cable longer than 3 m
- When purchasing a product without cable

Notes

- The motor cable and electromagnetic brake cable from the motor cannot be connected directly to the driver. When connecting to a driver, use the accessory connection cable (sold separately) or use the included connection cable.

How to Read the Specification Table

Maximum Holding Torque	: This is the maximum holding torque (holding force) the motor has when power is supplied (at rated current) but the motor is not rotating. (With geared types, the value of holding torque considers the permissible strength of the gear).
Permissible Torque	: This is the maximum torque value continuously applied to the gear output shaft.
Instantaneous Maximum Torque	: This is the maximum torque value applied to the gear output shaft when accelerating and decelerating such as when starting/stopping inertial load.
Holding torque at standstill	While power on: This is the holding torque in the state in which the automatic current down function is working. Electromagnetic brakes: Static friction torque that can be caused by the electromagnetic brakes when stopped. (Electromagnetic brakes are the non-excitation actuating type.)

Standard Type Frame Size 20 mm, 28 mm

Specifications

Product Name	Built-in Controller Type	AZ14AKD-◇	AZ15AKD-◇	AZ24AKD-◇	AZ26AKD-◇
	Pulse-Input Type	AZ14AK-◇	AZ15AK-◇	AZ24AK-◇	AZ26AK-◇
Maximum Holding Torque	N·m	0.02	0.036	0.095	0.19
Holding Torque at Motor Standstill	N·m	0.01	0.018	0.047	0.095
Rotor Inertia	J:kg·m^2	2.7×10^{-7}	3.9×10^{-7}	9.2×10^{-7}	17×10^{-7}
Resolution	Resolution Setting: 1000P/R	0.36°/Pulse			
Power Supply Input	Voltage	24 VDC±5%			
	Input current A	0.5	0.6	1.6	1.6

- A number indicating the desired length of **1** (1 m), **2** (2 m) or **3** (3 m) is entered where the box **-◇** is located within the product name when the cable is included with the product.

Speed - Torque Characteristics (Reference Value)

AZ14

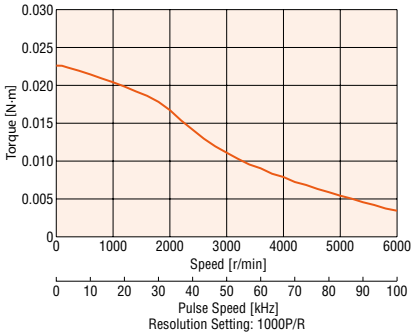

AZ15

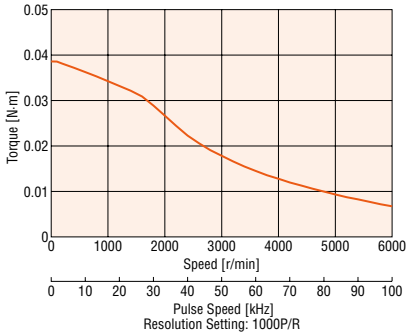

AZ24

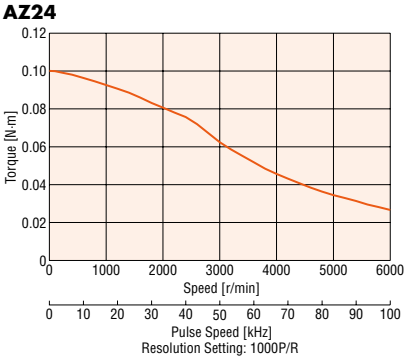

AZ26

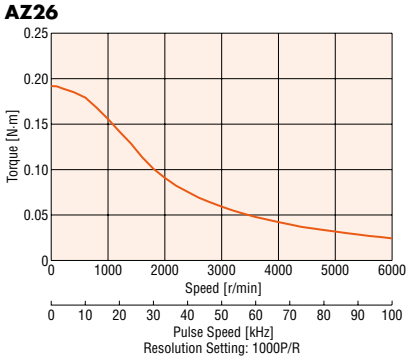

Notes

- The speed-torque characteristics are data based upon our measurement conditions. When these conditions change, these characteristics may change.
- Depending on the driving conditions, a considerable amount of heat may be generated by the motor. Be sure to keep the motor case temperature at 80°C or less in order to protect the ABZO sensor.

Standard Type Frame Size 42mm, 60 mm

Specifications

Product Name	Built-in Controller Type		AZ46□KD-◇	AZ66□KD-◇	AZ69□KD-◇
	Pulse-Input Type		AZ46□K-◇	AZ66□K-◇	AZ69□K-◇
Maximum Holding Torque		N·m	0.3	1	2
Holding Torque at Motor Standstill	Power ON	N·m	0.15	0.5	1
	Electromagnetic Brake	N·m	0.15	0.5	1
Rotor Inertia		J:kg·m^2	55×10^{-7} (71×10^{-7})*1	370×10^{-7} (530×10^{-7})*1	740×10^{-7} (900×10^{-7})*1
Resolution	Resolution Setting: 1000P/R		0.36°/Pulse		
Power Supply Input	Voltage		24 VDC±5%*2/48 VDC±5%*3		
	Input current	A	1.72 (1.8)*1	3.55(3.8)*1	3.45(3.7)*1

- Either **A** (single shaft) or **M** (electromagnetic brake) indicating the configuration is entered where the box □ is located within the product name.
  A number indicating the desired length of **1** (1 m), **2** (2 m) or **3** (3 m) is entered where the box ◇ is located within the product name when the cable is included with the product.

*1 The values inside the brackets ( ) represent the specification for the electromagnetic brake type.
*2 If the wiring distance between the electromagnetic brake type motor and driver is extended to 20 m using an accessory cable (sold separately), the 24 VDC± 4% specification applies.
*3 When operating with 48 VDC input, set inertia load to approximately 10 times or less that of the rotor inertia ratio, and twice that of the safety rate when calculating accelerator torque (**excluding AZ46**).

Speed - Torque Characteristics (Reference Value)

AZ46

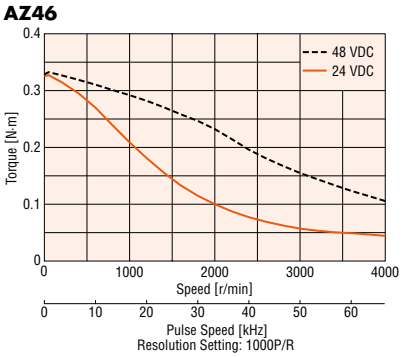

AZ66

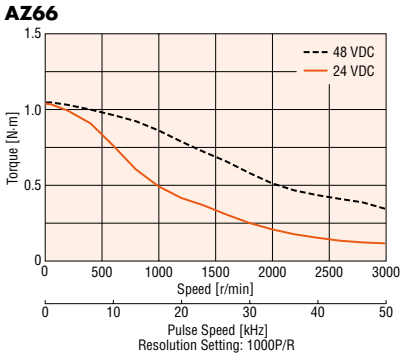

AZ69

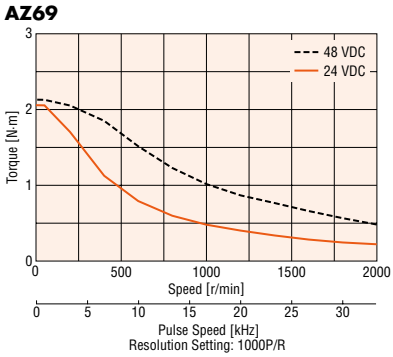

Notes

- The speed-torque characteristics are data based upon our measurement conditions. When these conditions change, these characteristics may change.
- Depending on the driving conditions, a considerable amount of heat may be generated by the motor. Be sure to keep the motor case temperature at 80°C or less in order to protect the ABZO sensor.

TS Geared Type Frame Size 42mm

Specifications

Product Name						
	Built-in Controller Type	AZ46□KD-TS3.6-◇	AZ46□KD-TS7.2-◇	AZ46□KD-TS10-◇	AZ46□KD-TS20-◇	AZ46□KD-TS30-◇
	Pulse-Input Type	AZ46□K-TS3.6-◇	AZ46□K-TS7.2-◇	AZ46□K-TS10-◇	AZ46□K-TS20-◇	AZ46□K-TS30-◇
Maximum Holding Torque	N·m	0.65	1.2	1.7	2	2.3
Rotor Inertia	J: kg·m^2	55×10^{-7} (71×10^{-7})*1				
Gear Ratio		3.6	7.2	10	20	30
Resolution	Resolution Setting: 1000P/R	0.1°/Pulse	0.05°/Pulse	0.036°/Pulse	0.018°/Pulse	0.012°/Pulse
Permissible Torque	N·m	0.65	1.2	1.7	2	2.3
Instantaneous Maximum Torque*	N·m	0.85	1.6	2	*	3
Holding Torque at Motor Standstill	Power ON N·m	0.54	1	1.5	1.8	2.3
	Electromagnetic Brake N·m	0.54	1	1.5	1.8	2.3
Speed Range	r/min	0~833	0~416	0~300	0~150	0~100
Backlash	arcmin	45 (0.75°)	25 (0.42°)		15 (0.25°)	
Power Supply Input	Voltage	24 VDC±5%*2/48 VDC±5%				
	Input current A	1.72(1.8)*1				

*For the output torque as a geared motor, see the speed-torque characteristics.

- Either **A** (single shaft) or **M** (electromagnetic brake) indicating the configuration is entered where the box □ is located within the product name.
  A number indicating the desired length of **1** (1 m), **2** (2 m) or **3** (3 m) is entered where the box ◇ is located within the product name when the cable is included with the product.

*1 The values inside the brackets ( ) represent the specification for the electromagnetic brake type.

*2 If the wiring distance between the electromagnetic brake type motor and driver is extended to 20 m using an accessory cable (sold separately), the 24 VDC± 4% specification applies.

Speed - Torque Characteristics (Reference Value)

AZ46 Gear Ratio **3.6**

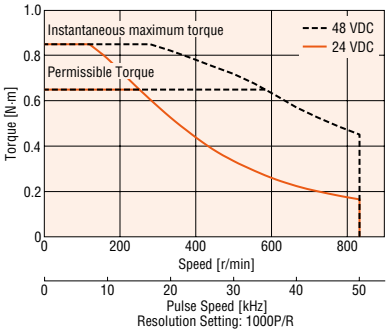

AZ46 Gear Ratio **7.2**

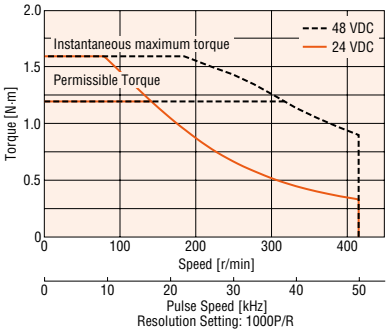

AZ46 Gear Ratio **10**

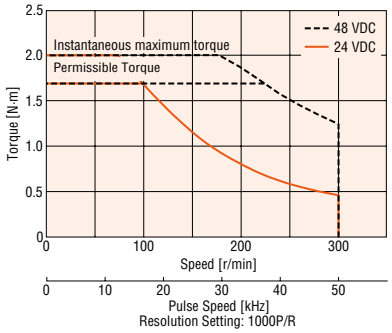

AZ46 Gear Ratio **20**

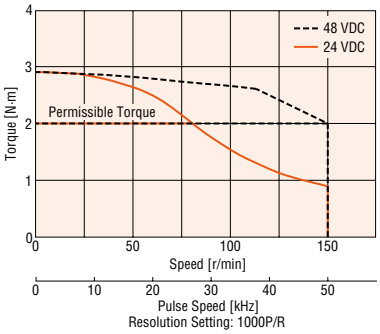

AZ46 Gear Ratio **30**

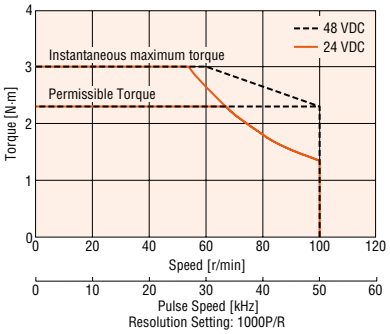

Notes

- The speed-torque characteristics are data based upon our measurement conditions. When these conditions change, these characteristics may change.
- Depending on the driving conditions, a considerable amount of heat may be generated by the motor. Be sure to keep the motor case temperature at 80°C or less in order to protect the ABZO sensor.

TS Geared Type Frame Size 60 mm

Specifications

Product Name						
	Built-in Controller Type	AZ66□KD-TS3.6-◇	AZ66□KD-TS7.2-◇	AZ66□KD-TS10-◇	AZ66□KD-TS20-◇	AZ66□KD-TS30-◇
	Pulse-Input Type	AZ66□K-TS3.6-◇	AZ66□K-TS7.2-◇	AZ66□K-TS10-◇	AZ66□K-TS20-◇	AZ66□K-TS30-◇
Maximum Holding Torque N·m		1.8	3	4	5	6
Rotor Inertia J:kg·m^2		370×10^{-7} (530×10^{-7})*1				
Gear Ratio		3.6	7.2	10	20	30
Resolution	Resolution Setting: 1000P/R	0.1°/Pulse	0.05°/Pulse	0.036°/Pulse	0.018°/Pulse	0.012°/Pulse
Permissible Torque N·m		1.8	3	4	5	6
Instantaneous Maximum Torque* N·m		*	*	*	8	10
Holding Torque at Motor Standstill	Power ON N·m	1.1	2.2	3	5	6
	Electromagnetic Brake N·m	1.1	2.2	3	5	6
Speed Range r/min		0~833	0~416	0~300	0~150	0~100
Backlash arcmin		35 (0.59°)	15 (0.25°)		10 (0.17°)	
Power Supply Input	Voltage	24 VDC ±5%*2/48 VDC ±5%*3				
	Input current A	3.55(3.8)*1				

*For the output torque as a geared motor, see the speed-torque characteristics.

- Either **A** (single shaft) or **M** (electromagnetic brake) indicating the configuration is entered where the box □ is located within the product name.
  A number indicating the desired length of **1** (1 m), **2** (2 m) or **3** (3 m) is entered where the box ◇ is located within the product name when the cable is included with the product.

*1 The values inside the brackets ( ) represent the specification for the electromagnetic brake type.

*2 If the wiring distance between the electromagnetic brake type motor and driver is extended to 20 m using an accessory cable (sold separately), the 24 VDC± 4% specification applies.

*3 When operating with 48 VDC input, set inertia load to approximately 10 times or less that of the rotor inertia ratio, and twice that of the safety rate when calculating accelerator torque.

Speed - Torque Characteristics (Reference Value)

AZ66 Gear Ratio **3.6**

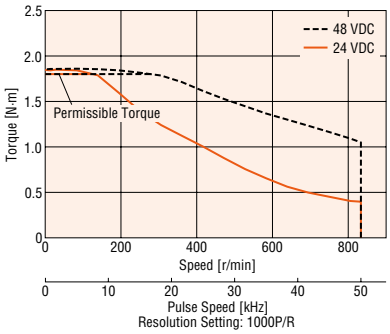

AZ66 Gear Ratio **7.2**

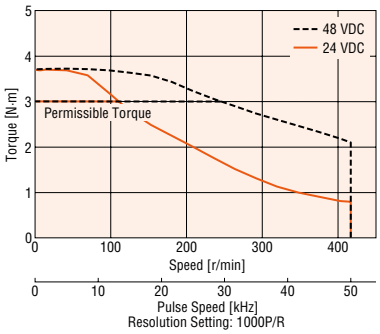

AZ66 Gear Ratio **10**

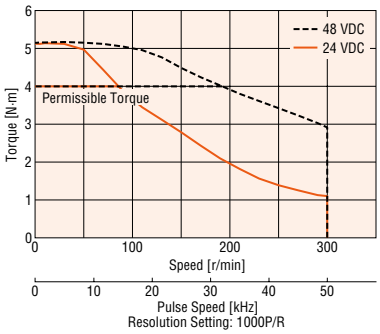

AZ66 Gear Ratio **20**

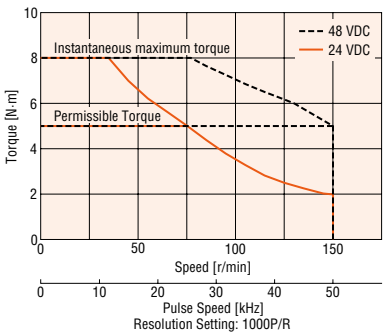

AZ66 Gear Ratio **30**

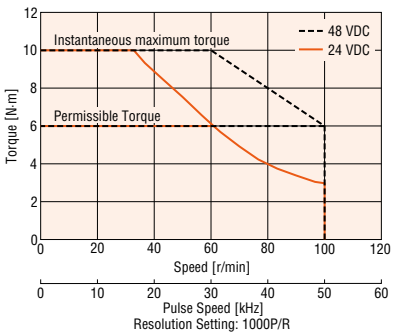

Notes

- The speed-torque characteristics are data based upon our measurement conditions. When these conditions change, these characteristics may change.
- Depending on the driving conditions, a considerable amount of heat may be generated by the motor. Be sure to keep the motor case temperature at 80°C or less in order to protect the ABZO sensor.

PS Geared Type Frame Size 42mm

Specifications

Product Name								
	Built-in Controller Type		AZ46□KD-PS5-◇	AZ46□KD-PS7.2-◇	AZ46□KD-PS10-◇	AZ46□KD-PS25-◇	AZ46□KD-PS36-◇	AZ46□KD-PS50-◇
	Pulse-Input Type		AZ46□K-PS5-◇	AZ46□K-PS7.2-◇	AZ46□K-PS10-◇	AZ46□K-PS25-◇	AZ46□K-PS36-◇	AZ46□K-PS50-◇
Maximum Holding Torque		N·m	1	1.5		2.5	3	
Rotor Inertia		J:kg·m^2	55×10^{-7} (71×10^{-7})*1					
Gear Ratio			5	7.2	10	25	36	50
Resolution	Resolution Setting: 1000P/R		0.072°/Pulse	0.05°/Pulse	0.036°/Pulse	0.0144°/Pulse	0.01°/Pulse	0.0072°/Pulse
Permissible Torque		N·m	1	1.5		2.5	3	
Instantaneous Maximum Torque*		N·m	*	2		6	*	6
Holding Torque at Motor Standstill	Power ON	N·m	0.75	1	1.5	2.5	3	
	Electromagnetic Brake	N·m	0.75	1	1.5	2.5	3	
Speed Range		r/min	0~600	0~416	0~300	0~120	0~83	0~60
Backlash		arcmin	15 (0.25°)					
Power Supply Input	Voltage		24 VDC ±5%*2/48 VDC ±5%					
	Input current	A	1.72(1.8)*1					

*For the output torque as a geared motor, see the speed-torque characteristics.

● Either **A** (single shaft) or **M** (electromagnetic brake) indicating the configuration is entered where the box □ is located within the product name.
A number indicating the desired length of **1** (1 m), **2** (2 m) or **3** (3 m) is entered where the box ◇ is located within the product name when the cable is included with the product.

*1 The values inside the brackets ( ) represent the specification for the electromagnetic brake type.

*2 If the wiring distance between the electromagnetic brake type motor and driver is extended to 20 m using an accessory cable (sold separately), the 24 VDC± 4% specification applies.

Speed - Torque Characteristics (Reference Value)

AZ46 Gear Ratio **5**

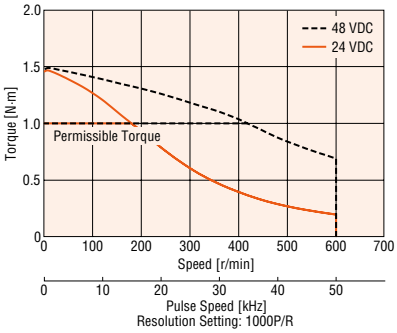

AZ46 Gear Ratio **7.2**

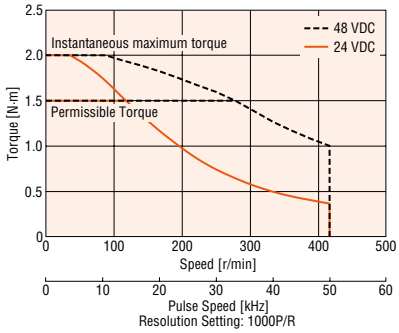

AZ46 Gear Ratio **10**

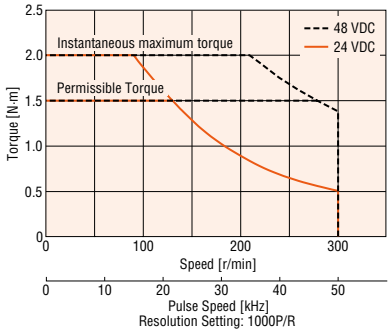

AZ46 Gear Ratio **25**

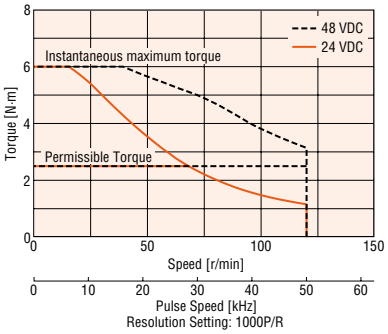

AZ46 Gear Ratio **36**

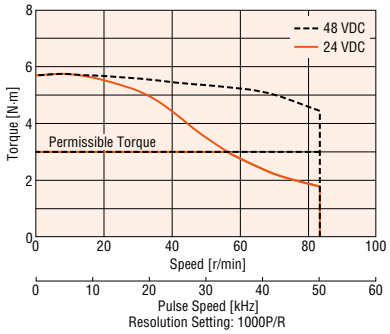

AZ46 Gear Ratio **50**

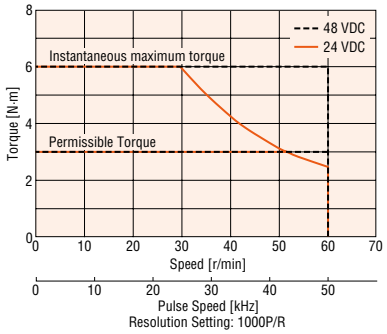

Notes

● The speed-torque characteristics are data based upon our measurement conditions. When these conditions change, these characteristics may change.

● Depending on the driving conditions, a considerable amount of heat may be generated by the motor. Be sure to keep the motor case temperature at 80°C or less in order to protect the ABZO sensor.

PS Geared Type Frame Size 60 mm

Specifications

Product Name							
Built-in Controller Type		AZ66□KD-PS5-◇	AZ66□KD-PS7.2-◇	AZ66□KD-PS10-◇	AZ66□KD-PS25-◇	AZ66□KD-PS36-◇	AZ66□KD-PS50-◇
Pulse-Input Type		AZ66□K-PS5-◇	AZ66□K-PS7.2-◇	AZ66□K-PS10-◇	AZ66□K-PS25-◇	AZ66□K-PS36-◇	AZ66□K-PS50-◇
Maximum Holding Torque	N·m	3.5	4	5	8		
Rotor Inertia	$J:kg·m^2$	370×10^{-7} (530×10^{-7})*1					
Gear Ratio		5	7.2	10	25	36	50
Resolution	Resolution Setting: 1000P/R	0.072°/Pulse	0.05°/Pulse	0.036°/Pulse	0.0144°/Pulse	0.01°/Pulse	0.0072°/Pulse
Permissible Torque	N·m	3.5	4	5	8		
Instantaneous Maximum Torque*	N·m	*	*	*	*	*	20
Holding Torque at Motor Standstill	Power ON N·m	2.5	3.6	5	7.6	8	
	Electromagnetic Brake N·m	2.5	3.6	5	7.6	8	
Speed Range	r/min	0~600	0~416	0~300	0~120	0~83	0~60
Backlash	arcmin	7 (0.12°)			9 (0.15°)		
Power Supply Input	Voltage	24 VDC ±5%*2/48 VDC ±5%*3					
	Input current A	3.55(3.8)*1					

*For the output torque as a geared motor, see the speed-torque characteristics.

● Either **A** (single shaft) or **M** (electromagnetic brake) indicating the configuration is entered where the box □ is located within the product name.
A number indicating the desired length of **1** (1 m), **2** (2 m) or **3** (3 m) is entered where the box ◇ is located within the product name when the cable is included with the product.

*1 The values inside the brackets ( ) represent the specification for the electromagnetic brake type.

*2 If the wiring distance between the electromagnetic brake type motor and driver is extended to 20 m using an accessory cable (sold separately), the 24 VDC± 4% specification applies.

*3 When operating with 48 VDC input, set inertia load to approximately 10 times or less that of the rotor inertia ratio, and twice that of the safety rate when calculating accelerator torque.

Speed - Torque Characteristics (Reference Value)

AZ66 Gear Ratio **5**

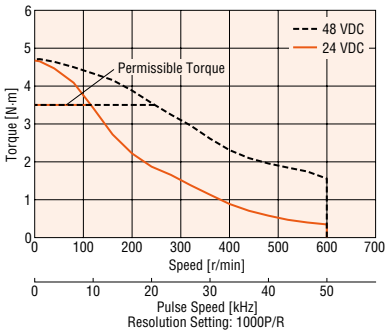

AZ66 Gear Ratio **7.2**

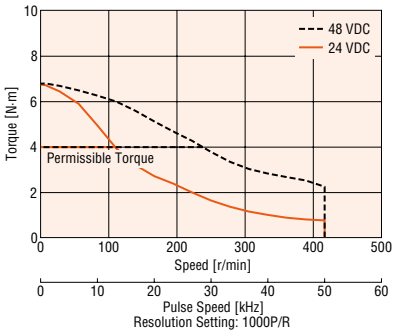

AZ66 Gear Ratio **10**

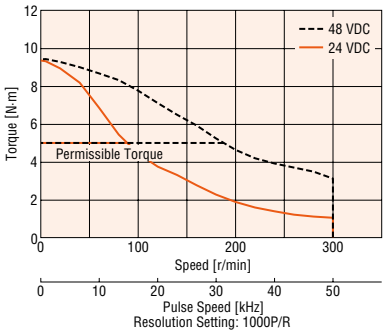

AZ66 Gear Ratio **25**

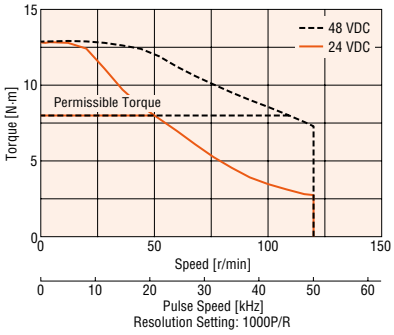

AZ66 Gear Ratio **36**

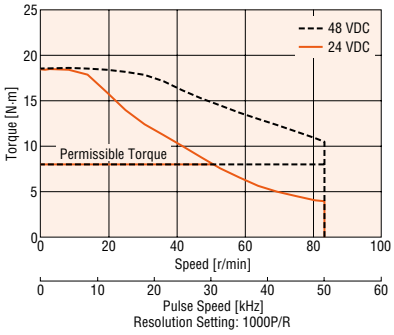

AZ66 Gear Ratio **50**

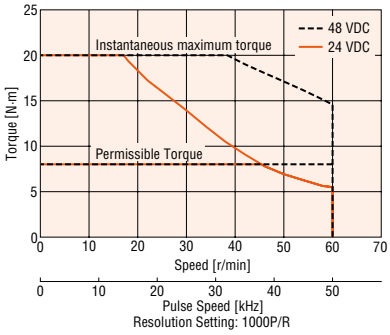

Notes

● The speed-torque characteristics are data based upon our measurement conditions. When these conditions change, these characteristics may change.

● Depending on the driving conditions, a considerable amount of heat may be generated by the motor. Be sure to keep the motor case temperature at 80°C or less in order to protect the ABZO sensor.

HPG Geared Type Frame Size 40 mm, 60 mm

Specifications

Product Name	Built-in Controller Type	AZ46□KD-HP5■-◇	AZ46□KD-HP9■-◇	AZ66□KD-HP5■-◇	AZ66□KD-HP15■-◇
	Pulse-Input Type	AZ46□K-HP5■-◇	AZ46□K-HP9■-◇	AZ66□K-HP5■-◇	AZ66□K-HP15■-◇
Maximum Holding Torque	N·m	1.5	2.5	5	9
Rotor Inertia	$J{:}kg{\cdot}m^2$	55×10^{-7} (71×10^{-7})*1		370×10^{-7} (530×10^{-7})*1	
Inertia moment*2	$J{:}kg{\cdot}m^2$	5.8×10^{-7} (4.2×10^{-7})	3.4×10^{-7} (2.9×10^{-7})	92×10^{-7} (86×10^{-7})	78×10^{-7} (77×10^{-7})
Gear Ratio		5	9	5	15
Resolution	Resolution Setting: 1000P/R	0.072°/Pulse	0.04°/Pulse	0.072°/Pulse	0.024°/Pulse
Permissible Torque*	N·m	*	2.5	*	9
Instantaneous Maximum Torque*	N·m	*	*	*	*
Holding Torque at Motor Standstill	Power ON N·m	0.75	1.35	2.5	7.5
	Electromagnetic Brake N·m	0.75	1.35	2.5	7.5
Speed Range	r/min	0~800	0~444	0~600	0~200
Backlash	arcmin	3 (0.05°)			
Power Supply Input	Voltage	24 VDC ±5%*4/48 VDC ±5%*5			
	Input current A	1.72(1.8)*1		3.55(3.8)*1	
Output flange face runout*3	mm	0.02			
Output flange inner diameter runout*3	mm	0.03		0.04	

*For the output torque as a geared motor, see the speed-torque characteristics.

● Either **A** (single shaft) or **M** (electromagnetic brake) indicating the configuration is entered where the box □ is located within the product name.
A number indicating the desired length of **1** (1 m), **2** (2 m) or **3** (3 m) is entered where the box ◇ is located within the product name when the cable is included with the product.
The ■ within the product name includes **F** in the case of flange output type.

*1 The values inside the brackets ( ) represent the specification for the electromagnetic brake type.
*2 This is the value with the inertia moment inside the gear section converted into the motor shaft. The value within ( ) is the flange output type.
*3 This is the flange output type value.
*4 If the wiring distance between the electromagnetic brake type motor and driver is extended to 20 m using an accessory cable (sold separately), the 24 VDC± 4% specification applies.
*5 When operating with 48 VDC input, set inertia load to approximately 10 times or less that of the rotor inertia ratio, and twice that of the safety rate when calculating accelerator torque. (**excluding AZ46**)

Speed - Torque Characteristics (Reference Value)

AZ46 Gear Ratio **5**

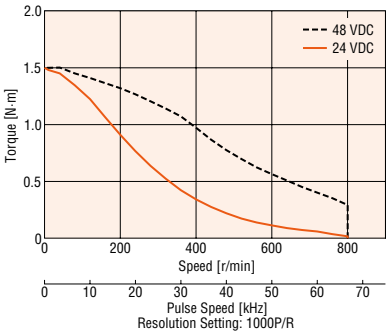

AZ46 Gear Ratio **9**

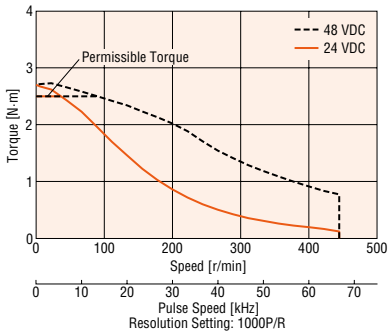

AZ66 Gear Ratio **5**

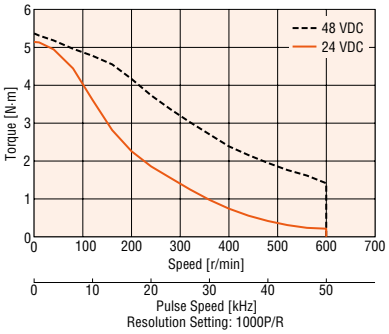

AZ66 Gear Ratio **15**

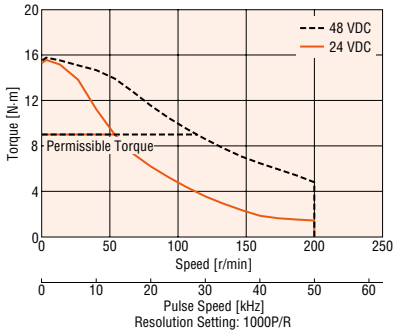

Notes

● The speed-torque characteristics are data based upon our measurement conditions. When these conditions change, these characteristics may change.
● Depending on the driving conditions, a considerable amount of heat may be generated by the motor. Be sure to keep the motor case temperature at 80°C or less in order to protect the ABZO sensor.

Harmonic Geared Type Frame Size 42mm, 60 mm

Specifications

Product Name			AZ46□KD-HS50-◇	AZ46□KD-HS100-◇	AZ66□KD-HS50-◇	AZ66□KD-HS100-◇
	Pulse-Input Type		AZ46□K-HS50-◇	AZ46□K-HS100-◇	AZ66□K-HS50-◇	AZ66□K-HS100-◇
Maximum Holding Torque		N·m	3.5	5	7	10
Rotor Inertia		J:kg·m^2	72×10^{-7} (88×10^{-7})*1		405×10^{-7} (565×10^{-7})*1	
Gear Ratio			50	100	50	100
Resolution	Resolution Setting:1000P/R		0.0072°/Pulse	0.0036°/Pulse	0.0072°/Pulse	0.0036°/Pulse
Permissible Torque		N·m	3.5	5	7	10
Instantaneous Maximum Torque*		N·m	8.3	11	*	36
Holding Torque at Motor Standstill	Power ON	N·m	3.5	5	7	10
	Electromagnetic Brake	N·m	3.5	5	7	10
Speed Range		r/min	0~70	0~35	0~60	0~30
Lost Motion (Load torque)		arcmin	1.5 or less (±0.16N·m)	1.5 or less (±0.20N·m)	0.7 or less (±0.28N·m)	0.7 or less (±0.39N·m)
Power Supply Input	Voltage		24 VDC ±5%*2/48 VDC ±5%*3			
	Input current	A	1.72(1.8)*1		3.55(3.8)*1	

*For the output torque as a geared motor, see the speed-torque characteristics.

- Either **A** (single shaft) or **M** (electromagnetic brake) indicating the configuration is entered where the box □ is located within the product name.
  A number indicating the desired length of **1** (1 m), **2** (2 m) or **3** (3 m) is entered where the box ◇ is located within the product name when the cable is included with the product.

*1 The values inside the brackets ( ) represent the specification for the electromagnetic brake type.

*2 If the wiring distance between the electromagnetic brake type motor and driver is extended to 20 m using an accessory cable (sold separately), the 24 VDC± 4% specification applies.

*3 When operating with 48 VDC input, set inertia load to approximately 10 times or less that of the rotor inertia ratio, and twice that of the safety rate when calculating accelerator torque(**excluding AZ46**).

Notes

- The rotor inertia represents a sum of the moments of inertia of the harmonic gear converted to motor shaft values.

Speed - Torque Characteristics (Reference Value)

AZ46 Gear Ratio **50**

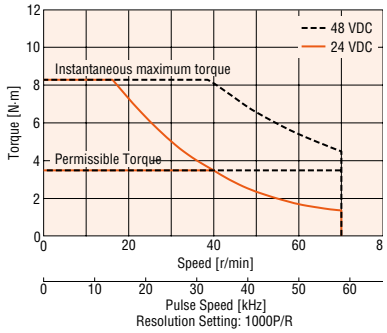

AZ46 Gear Ratio **100**

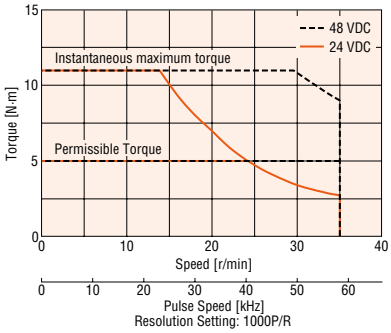

AZ66 Gear Ratio **50**

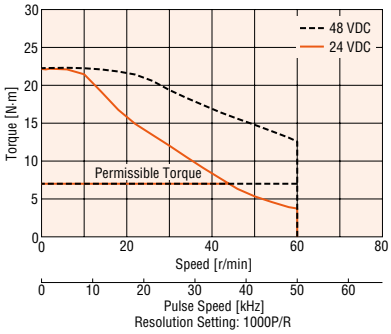

AZ66 Gear Ratio **100**

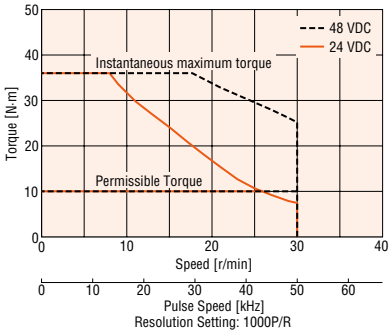

Notes

- The speed-torque characteristics are data based upon our measurement conditions. When these conditions change, these characteristics may change.
- Depending on the driving conditions, a considerable amount of heat may be generated by the motor. Be sure to keep the motor case temperature at 80°C or less in order to protect the ABZO sensor.

Driver Specifications

			Built-in Controller Type	Pulse-Input Type
I/O Functions	Pulse-Input Type		–	Maximum input pulse frequency Host controller has line driver output: 1mHz (when Duty 50%) Host controller has open collector output: 250 kHz (when Duty 50%) Negative logic pulse input (initial values)
	Direct Input		Number of Input: 10	Number of Input: 6
	Direct Output		Number of Output: 6	
	RS-485 Communications	Network Input	16 Bit	–
		Network Output	16 Bit	–
Number of Positioning Data Sets			256	256 (up to 32 available)
Data Setting Software **MEXE02**			○	

Built-in Controller Type RS-485 Communication Specification

Protocol	Modbus RTU mode
Electrical Characteristics	EIA-485 standard, straight cable Using shielded twisted pair cables (recommended TIA/EIA-568B CAT5e or more), a total maximum length of 50 m can be used.
Communication Mode	Half-duplex communications, start-stop synchronization (data: 8-bit, stop bit(s): 1 bit/2 bits, parity: none/even/odd)
Baud Rate	Selection from 9600 bps/19200 bps/38400 bps/57600 bps/115200 bps/230400 bps
Connection Type	A maximum of 31 units could be connected for each programmable controller (master device).

General Specifications

		Motor	Driver	
			Built-in Controller Type	Pulse-Input Type
Thermal Class		130 (B)	–	
Insulation Resistance		The measured value is 100 MΩ or more when a 500 VDC megger is applied between the following locations: ・Case - Motor Windings ・Case - Electromagnetic Brake Windings*1	The measured value is 100 MΩ or more when a 500 VDC megger is applied between the following locations: ・Protective Earth Terminal - Power Supply Terminal	
Dielectric Strength		No abnormality is found with the following application for 1 minute: **AZ14**, **AZ15**, **AZ24**, **AZ26** ・Case - Motor Windings 0.5kVAC, 50 Hz or 60 Hz **AZ46**, **AZ66**, **AZ69** ・Case - Motor Windings 1.0kVAC, 50 Hz or 60 Hz ・Case - Electromagnetic Brake Windings*1 1.0 kVAC, 50 Hz or 60 Hz	–	
Operating Environment (in operation)	Ambient Temperature	0~+40˚C (non-freezing)	0~+50˚C (non-freezing)	
	Ambient Humidity	85% or less (no condensation)		
	Atmosphere	No corrosive gases or dirt. Not directly affected by water or oil.		
Degree of Protection		**AZ14**, **AZ15**, **AZ24**, **AZ26**: IP40 (excluding mounting surface and connector) **AZ46**, **AZ66**, **AZ69**: IP66 (excluding mounting surface and connector)	IP10	
Stop Position Accuracy		**AZ14**, **AZ15**, **AZ24**, **AZ26**: ±5 min (±0.083°) **AZ46**: ±4 min (±0.067°) **AZ66**, **AZ69**: ±3min (±0.05°)		
Shaft Runout		0.05 T.I.R. (mm)*2	–	
Concentricity		0.075 T.I.R. (mm)*2	–	
Perpendicularity		0.075T.I.R.(mm)*2	–	
Multi-rotation detection range in power off state		**AZ14**, **AZ15**, **AZ24**, **AZ26**: ±450 rotations (900 rotations) **AZ46**, **AZ66**, **AZ69**: ±900 rotations (1,800 rotations)		

*1 Electromagnetic brake type only
*2 T.I.R. (Total Indicator Reading): Centred around the reference shaft, this expresses the total volume read from the dial gauge when the measured section is rotated once.

Notes

● When connecting the motor and the driver, do not measure insulation resistance or perform pressure resistance tests. Furthermore, do not perform these tests on the motor ABZO sensor.

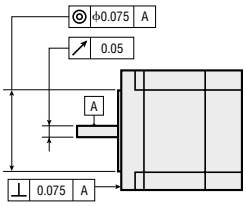

Permissible Radial Load and Permissible Axial Load

Unit: N

Type	Motor Frame Size	Product Name	Gear Ratio	Permissible Radial Load Distance from Shaft End mm 0	5	10	15	20	Permissible Axial Load
Standard Type	20 mm	**AZ14**, **AZ15**	–	12	15	–	–	–	3
	28 mm	**AZ24**, **AZ26**		25	34	52	–	–	5
	42 mm	**AZ46**		35	44	58	85	–	15
	60 mm	**AZ66**, **AZ69**		90	100	130	180	270	30
TS Geared Type	42 mm	**AZ46**	**3.6**, **7.2**, **10**	20	30	40	50	–	15
			20, **30**	40	50	60	70	–	
	60 mm	**AZ66**	**3.6**, **7.2**, **10**	120	135	150	165	180	40
			20, **30**	170	185	200	215	230	
PS Geared Type	42 mm	**AZ46**	**5**	70	80	95	120	–	100
			7.2	80	90	110	140	–	
			10	85	100	120	150	–	
			25	120	140	170	210	–	
			36	130	160	190	240	–	
			50	150	170	210	260	–	
	60 mm	**AZ66**	**5**	170	200	230	270	320	200
			7.2	200	220	260	310	370	
			10	220	250	290	350	410	
			25	300	340	400	470	560	
			36	340	380	450	530	630	
			50	380	430	500	600	700	
HPG Geared Type	40 mm	**AZ46**	**5**	150	170	190	230	270	430
			9	180	200	230	270	320	510
	60 mm	**AZ66**	**5**	250	270	300	330	360	700
			15	360	380	420	460	510	980
Harmonic Geared Type	42 mm	**AZ46**	**50**, **100**	180	220	270	360	510	220
	60 mm	**AZ66**		320	370	440	550	720	450

● The products can be identified with the detailed product code.
PS geared type, **HPG** geared type, when either the permissible radial load or permissible axial load are added, shall have a lifespan value satisfying 20,000 hours.
For the gearhead lifespan please contact the nearest Oriental Motor sales office.

Radial Load and Axial Load

Distance from Shaft End [mm]

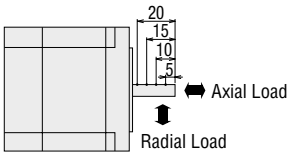

Permissible Moment Load

If an eccentric load is applied when attaching an arm or table to the flange face, calculate the moment load with the following formula. The moment load should not exceed the permissible values shown in the table below.

HPG Geared Type Flange Output Type

Product Name	Gear Ratio	Permissible Moment Load (N·m)
AZ46	**5**	4.9
	9	5.9
AZ66	**5**	12
	15	17.2

The load moment load can be calculated according to the following formula.

Example 1: When external force F is applied at a distance of L from the centre of the output flange

Load moment load [N·m]: M=F ×L

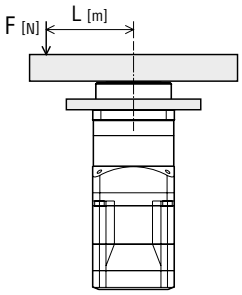

Example 2: When external force F1 is applied at a distance of L from the surface mounting of the output flange

Load moment load [N·m]: M=F1× (L+coefficient a)

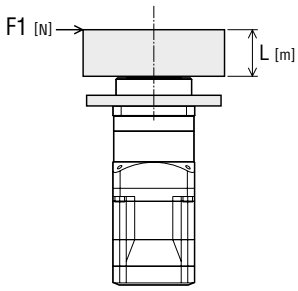

Product Name	Coefficient a (m)
AZ46	0.006
AZ66	0.011

Harmonic Geared Type

Product Name	Gear Ratio	Permissible Moment Load (N·m)
AZ46	**50, 100**	5.6
AZ66		11.6

The load moment load can be calculated according to the following formula.

Example 1: When external force F is applied at a distance of L from the centre of the output flange

Load moment load [N·m]: M=F × L

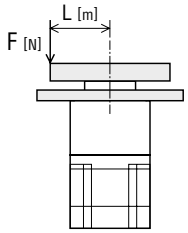

Load Torque - Driver Input Current Characteristics

The following are the relationships between the load torque and driver input current at each speed when the motor is operated. From these characteristics, it is possible to estimate the current capacity actually required when used with multiple axes. For geared motors, convert to torque and speed at the motor shaft.

Motor shaft speed = Gear output shaft speed × Gear ratio [r/min]

$$\text{Motor shaft torque} = \frac{\text{Gear output shaft torque}}{\text{Gear Ratio}} \text{ [N·m]}$$

24 VDC

AZ14

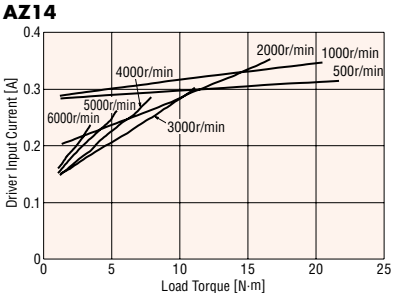

AZ15

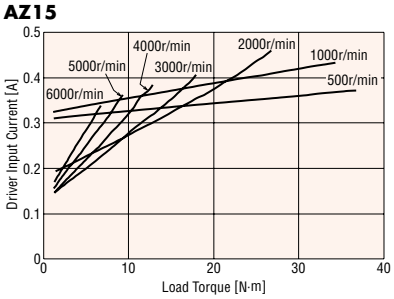

AZ24

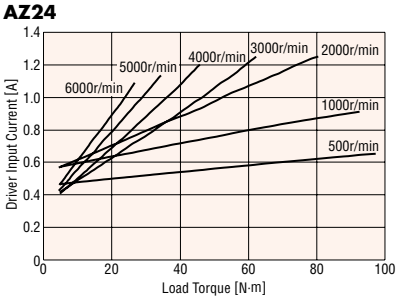

AZ26

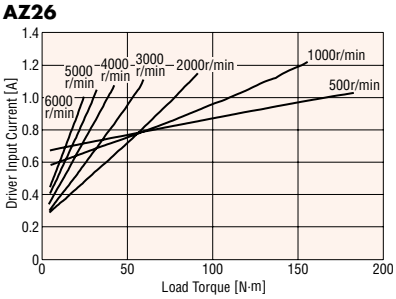

AZ46

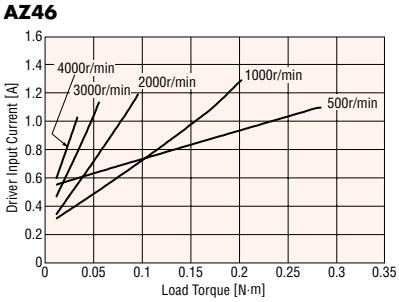

AZ66

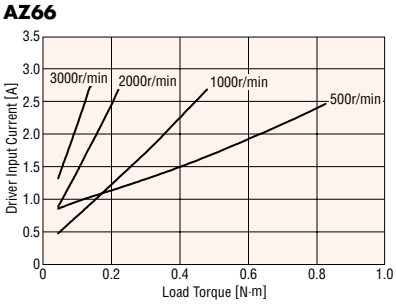

AZ69

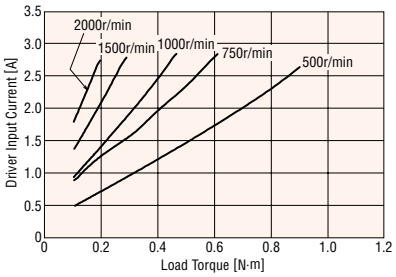

48 VDC

AZ46

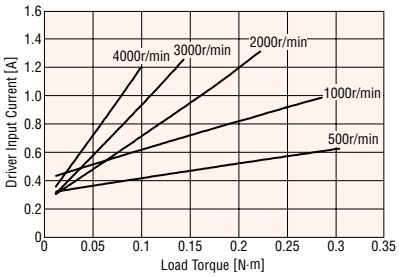

AZ66

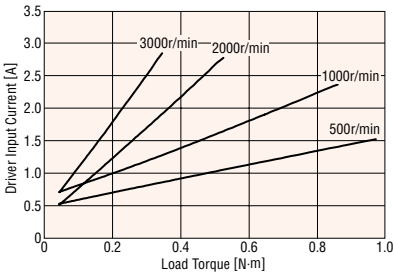

AZ69

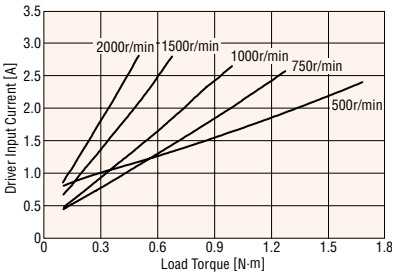

Dimensions (Unit mm)

Motors

◇Standard Type

Frame Size 20 mm

Product Name		Motor Product Name	L	Mass kg
Built-in Controller	Pulse-Input			
AZ14AKD-◇	**AZ14AK-◇**	AZM14AK	50	0.08
AZ15AKD-◇	**AZ15AK-◇**	AZM15AK	60	0.1

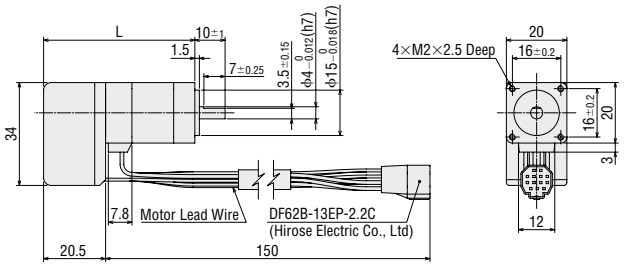

Frame Size 28 mm

Product Name		Motor Product Name	L	Mass kg
Built-in Controller	Pulse-Input			
AZ24AKD-◇	**AZ24AK-◇**	AZM24AK	54.5	0.15
AZ26AKD-◇	**AZ26AK-◇**	AZM26AK	74	0.24

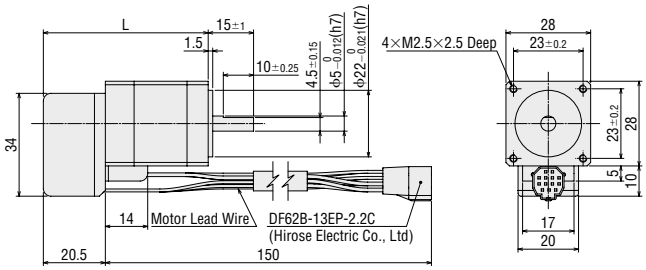

Frame Size 42 mm

Product Name		Motor Product Name	Mass kg
Built-in Controller	Pulse-Input		
AZ46AKD-◇	**AZ46AK-◇**	AZM46AK	0.44

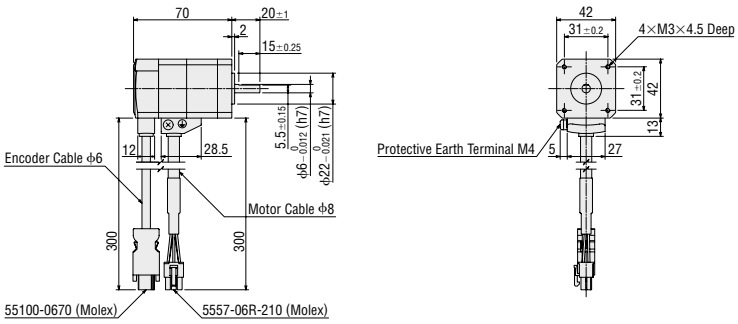

● A number indicating the desired length of **1** (1 m), **2** (2 m) or **3** (3 m) is entered where the box ◇ is located within the product name when the cable is included with the product.

Frame Size 60 mm

Product Name		Motor Product Name	L	Mass kg
Built-in Controller	Pulse-Input			
AZ66AKD-◇	**AZ66AK-◇**	AZM66AK	72	0.91
AZ69AKD-◇	**AZ69AK-◇**	AZM69AK	97.5	1.4

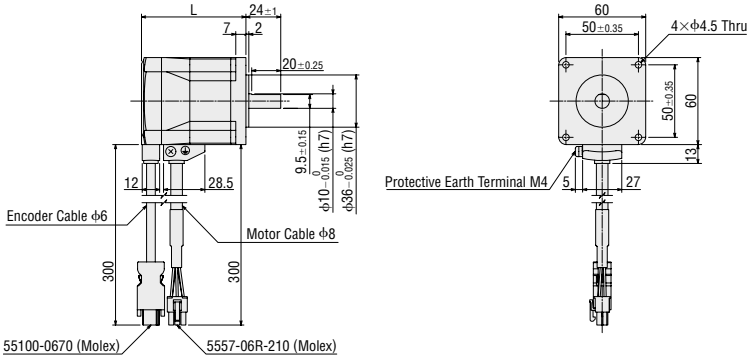

◇Standard Type with Electromagnetic Brake
Frame Size 42 mm

Product Name		Motor Product Name	Mass kg
Built-in Controller	Pulse-Input		
AZ46MKD-◇	**AZ46MK-◇**	AZM46MK	0.61

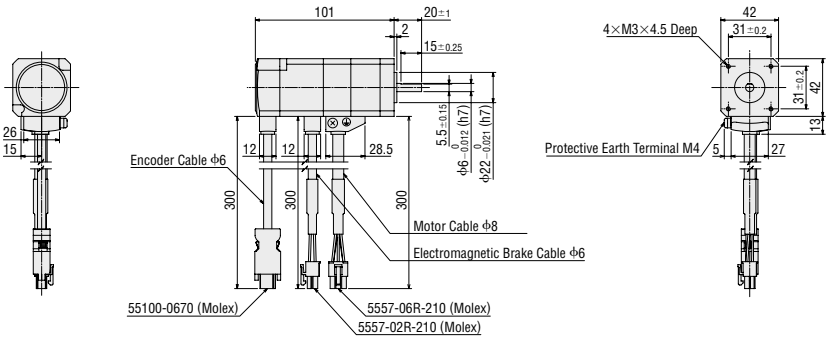

Frame Size 60 mm

Product Name		Motor Product Name	L	Mass kg
Built-in Controller	Pulse-Input			
AZ66MKD-◇	**AZ66MK-◇**	AZM66MK	118	1.3
AZ69MKD-◇	**AZ69MK-◇**	AZM69MK	143.5	1.8

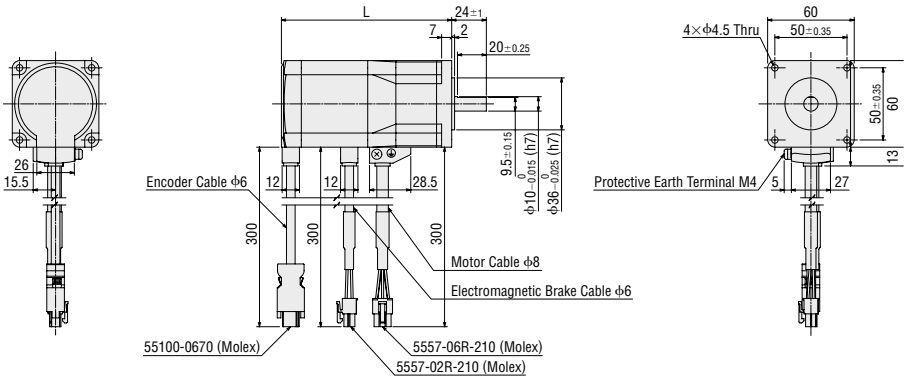

● A number indicating the desired length of **1** (1 m), **2** (2 m) or **3** (3 m) is entered where the box ◇ is located within the product name when the cable is included with the product.

◇TS Geared Type
Frame Size 42 mm

Product Name		Motor Product Name	Gear Ratio	Mass kg
Built-in Controller	Pulse-Input			
AZ46AKD-TS■-◇	**AZ46AK-TS■-◇**	AZM46AK-TS■	**3.6**, **7.2**, **10**, **20**, **30**	0.59

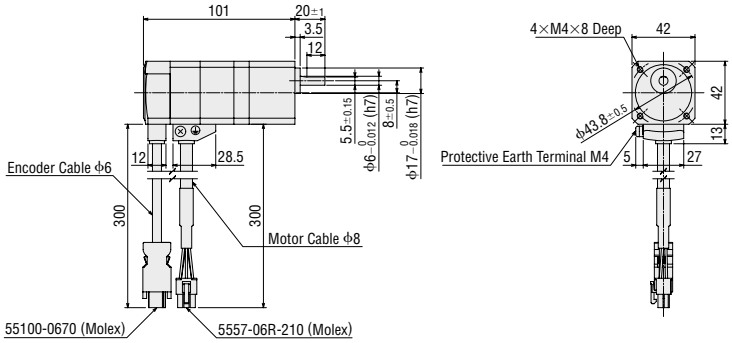

Frame Size 60 mm

Product Name		Motor Product Name	Gear Ratio	Mass kg
Built-in Controller	Pulse-Input			
AZ66AKD-TS■-◇	**AZ66AK-TS■-◇**	AZM66AK-TS■	**3.6**, **7.2**, **10**, **20**, **30**	1.3

● Installation screw: M4×60 P0.7 (4 screws included)

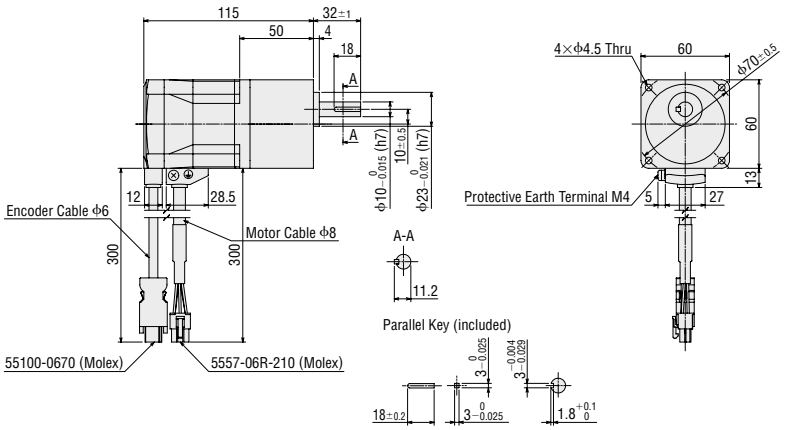

◇TS Geared Type with Electromagnetic Brake
Frame Size 42 mm

Product Name		Motor Product Name	Gear Ratio	Mass kg
Built-in Controller	Pulse-Input			
AZ46MKD-TS■-◇	**AZ46MK-TS■-◇**	AZM46MK-TS■	**3.6**, **7.2**, **10**, **20**, **30**	0.76

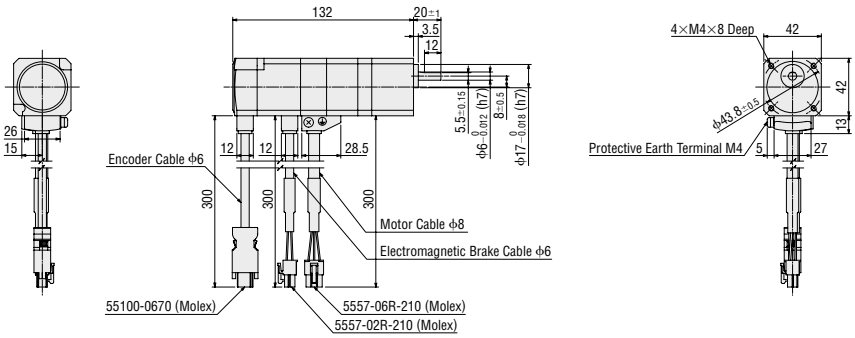

● The ■ within the product name includes a number expressing the gear ratio.
A number indicating the desired length of **1** (1 m), **2** (2 m) or **3** (3 m) is entered where the box ◇ is located within the product name when the cable is included with the product.

Frame Size 60 mm

Product Name		Motor Product Name	Gear Ratio	Mass kg
Built-in Controller	Pulse-Input			
AZ66MKD-TS■-◇	**AZ66MK-TS■-◇**	AZM66MK-TS■	**3.6**, **7.2**, **10**, **20**, **30**	1.7

● Installation screw: M4×60 P0.7 (4 screws included)

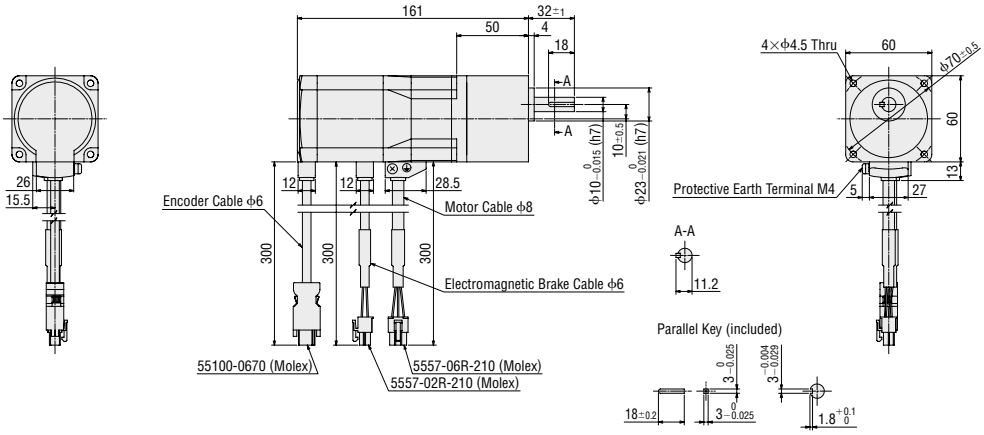

◇**PS** Geared Type

Frame Size 42 mm

Product Name		Motor Product Name	Gear Ratio	L	Mass kg
Built-in Controller	Pulse-Input				
AZ46AKD-PS■-◇	**AZ46AK-PS■-◇**	AZM46AK-PS■	**5**, **7.2**, **10**	98	0.64
			25, **36**, **50**	121.5	0.79

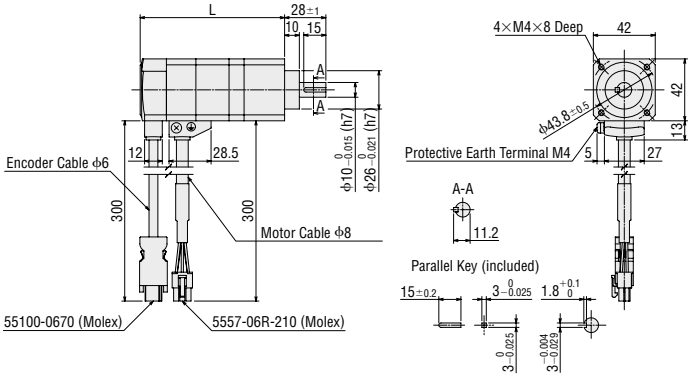

Frame Size 60 mm

Product Name		Motor Product Name	Gear Ratio	L	Mass kg
Built-in Controller	Pulse-Input				
AZ66AKD-PS■-◇	**AZ66AK-PS■-◇**	AZM66AK-PS■	**5**, **7.2**, **10**	104	1.3
			25, **36**, **50**	124	1.6

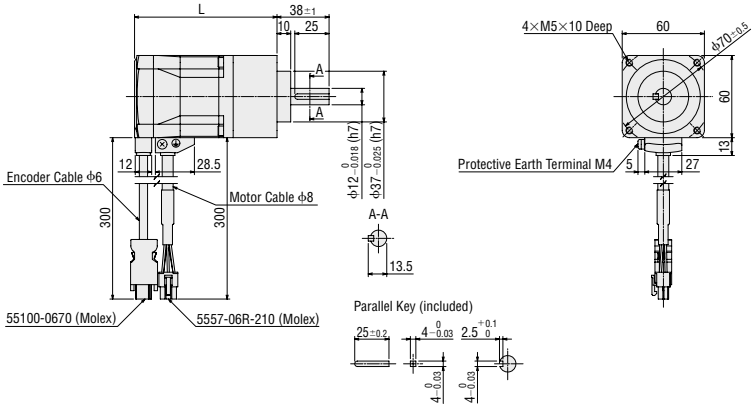

● The ■ within the product name includes a number expressing the gear ratio.
A number indicating the desired length of **1** (1 m), **2** (2 m) or **3** (3 m) is entered where the box ◇ is located within the product name when the cable is included with the product.

◇**PS** Geared Type with Electromagnetic Brake

Frame Size 42 mm

Product Name		Motor Product Name	Gear Ratio	L	Mass kg
Built-in Controller	Pulse-Input				
AZ46MKD-PS■-◇	**AZ46MK-PS■-◇**	AZM46MK-PS■	**5**, **7.2**, **10**	129	0.81
			25, **36**, **50**	152	0.96

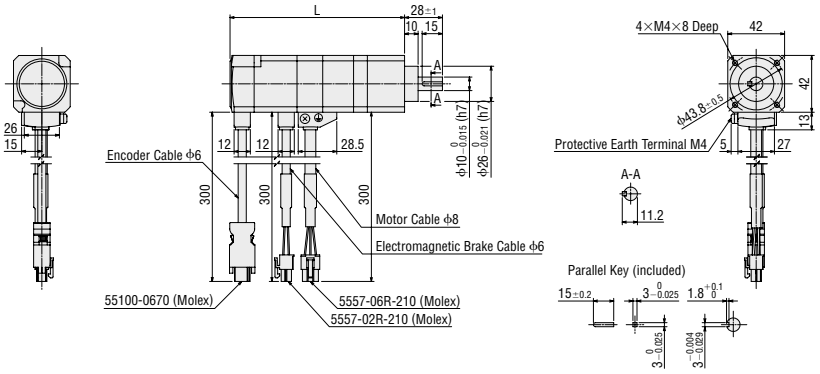

Frame Size 60 mm

Product Name		Motor Product Name	Gear Ratio	L	Mass kg
Built-in Controller	Pulse-Input				
AZ66MKD-PS■-◇	**AZ66MK-PS■-◇**	AZM66MK-PS■	**5**, **7.2**, **10**	150	1.7
			25, **36**, **50**	170	2.0

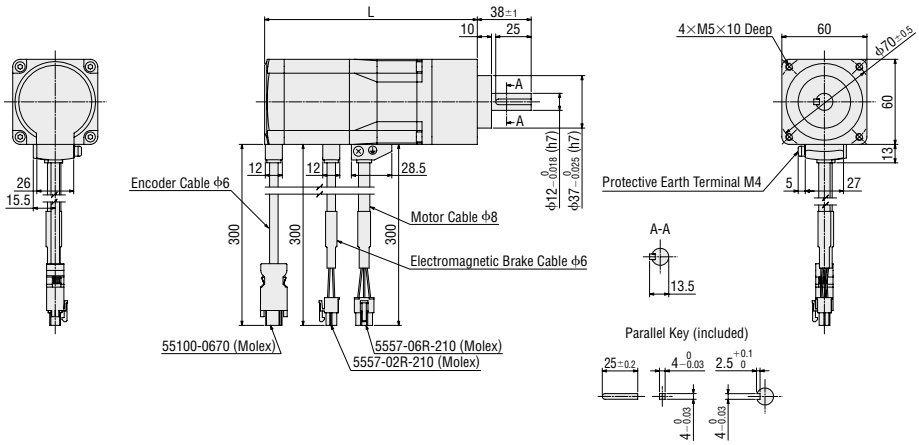

◇**HPG** Geared Type Shaft Output Type

Frame Size 40 mm

Product Name		Motor Product Name	Gear Ratio	Mass kg
Built-in Controller	Pulse-Input			
AZ46AKD-HP■-◇	**AZ46AK-HP■-◇**	AZM46AK-HP■	**5**, **9**	0.71

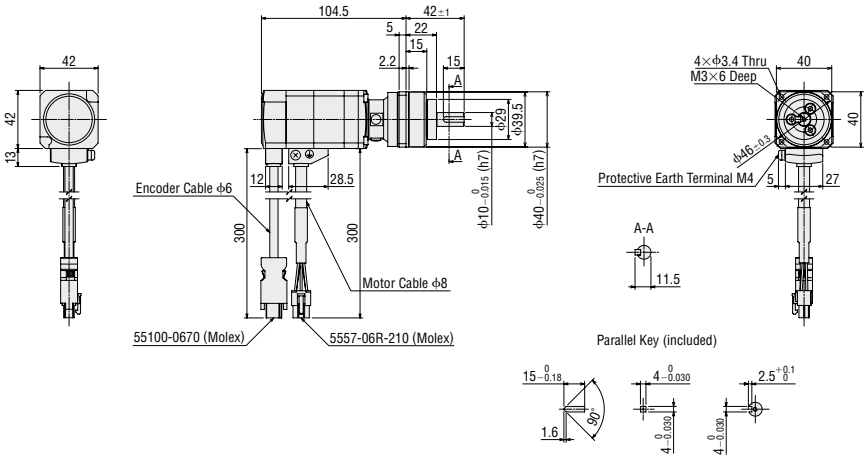

● The ■ within the product name includes a number expressing the gear ratio.
A number indicating the desired length of **1** (1 m), **2** (2 m) or **3** (3 m) is entered where the box ◇ is located within the product name when the cable is included with the product.

Frame Size 60 mm

Product Name		Motor Product Name	Gear Ratio	Mass kg
Built-in Controller	Pulse-Input			
AZ66AKD-HP■-◇	**AZ66AK-HP■-◇**	AZM66AK-HP■	**5**, **15**	1.9

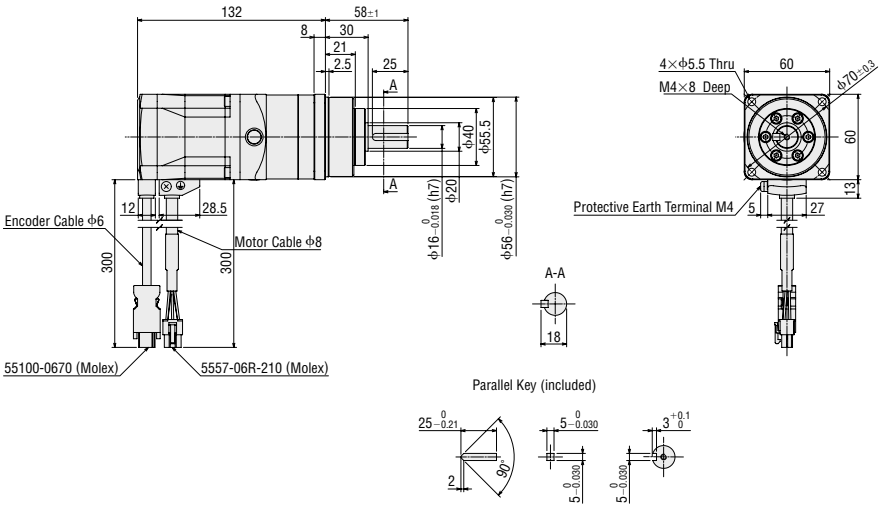

◇**HPG** Geared Type Flange Output Type
Frame Size 40 mm

Product Name		Motor Product Name	Gear Ratio	Mass kg
Built-in Controller	Pulse-Input			
AZ46AKD-HP■F-◇	**AZ46AK-HP■F-◇**	AZM46AK-HP■F	**5**, **9**	0.66

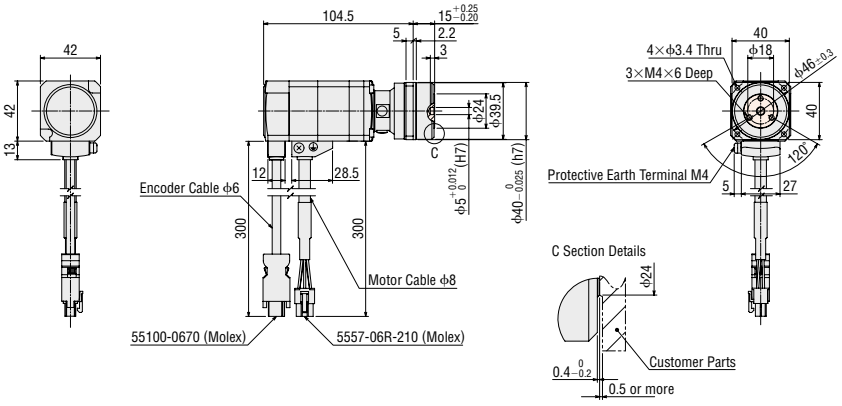

Frame Size 60 mm

Product Name		Motor Product Name	Gear Ratio	Mass kg
Built-in Controller	Pulse-Input			
AZ66AKD-HP■F-◇	**AZ66AK-HP■F-◇**	AZM66AK-HP■F	**5**, **15**	1.8

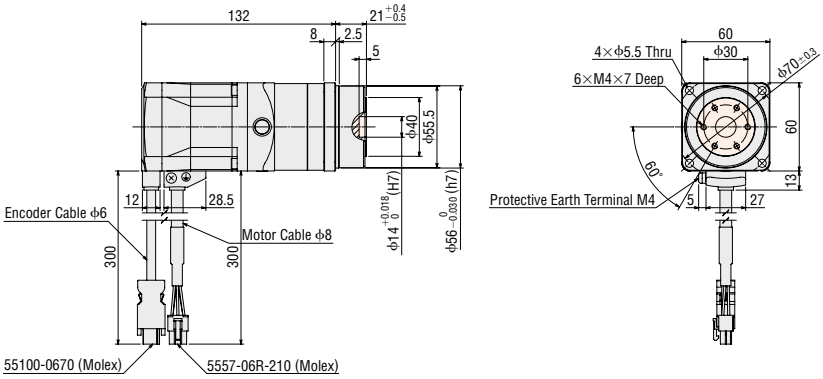

● The coloured part ▭ of the outline drawing is the rotation section.
● The ■ within the product name includes a number expressing the gear ratio.
A number indicating the desired length of **1** (1 m), **2** (2 m) or **3** (3 m) is entered where the box ◇ is located within the product name when the cable is included with the product.

◇**HPG** Geared Type with Electromagnetic Brake Shaft Output Type

Frame Size 40 mm

Product Name		Motor Product Name	Gear Ratio	Mass kg
Built-in Controller	Pulse-Input			
AZ46MKD-HP■-◇	**AZ46MK-HP■-◇**	AZM46MK-HP■	**5**, **9**	0.88

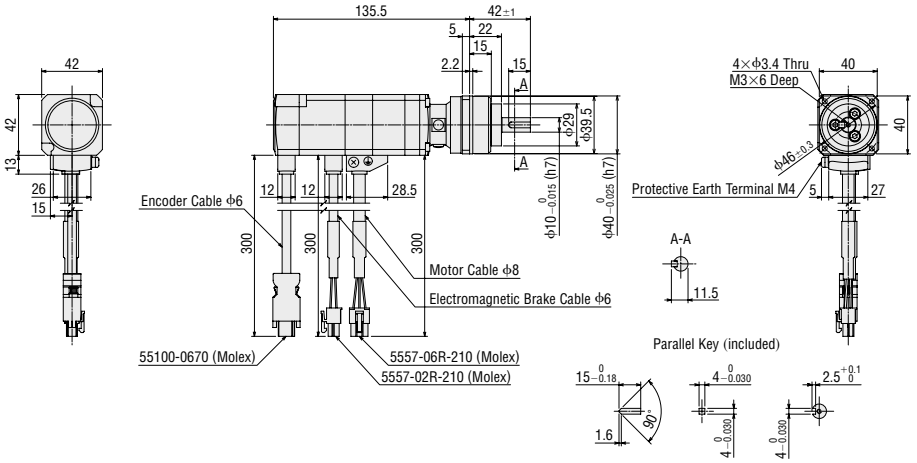

Frame Size 60 mm

Product Name		Motor Product Name	Gear Ratio	Mass kg
Built-in Controller	Pulse-Input			
AZ66MKD-HP■-◇	**AZ66MK-HP■-◇**	AZM66MK-HP■	**5**, **15**	2.3

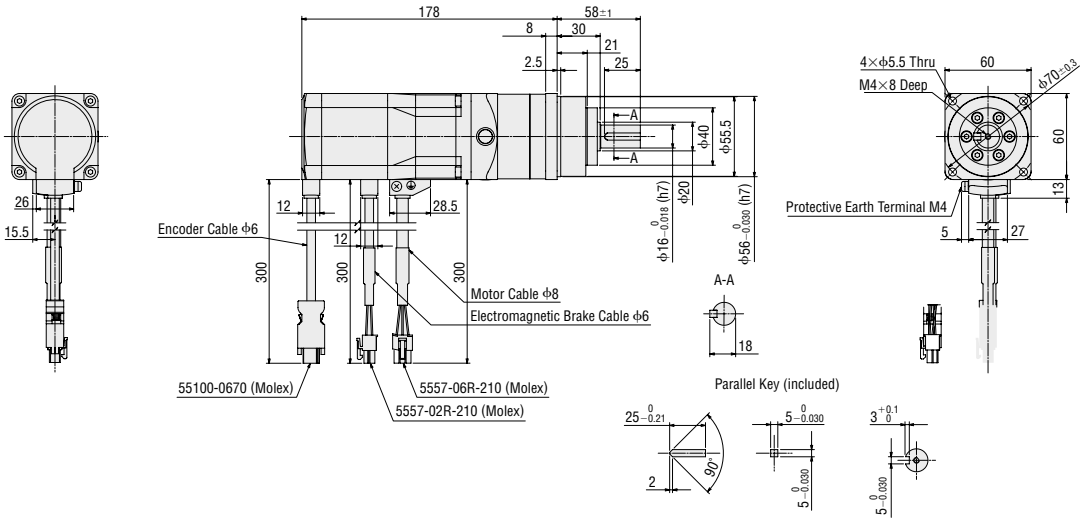

◇**HPG** Geared Type with Electromagnetic Brake Flange Output Type

Frame Size 40 mm

Product Name		Motor Product Name	Gear Ratio	Mass kg
Built-in Controller	Pulse-Input			
AZ46MKD-HP■F-◇	**AZ46MK-HP■F-◇**	AZM46MK-HP■F	**5**, **9**	0.83

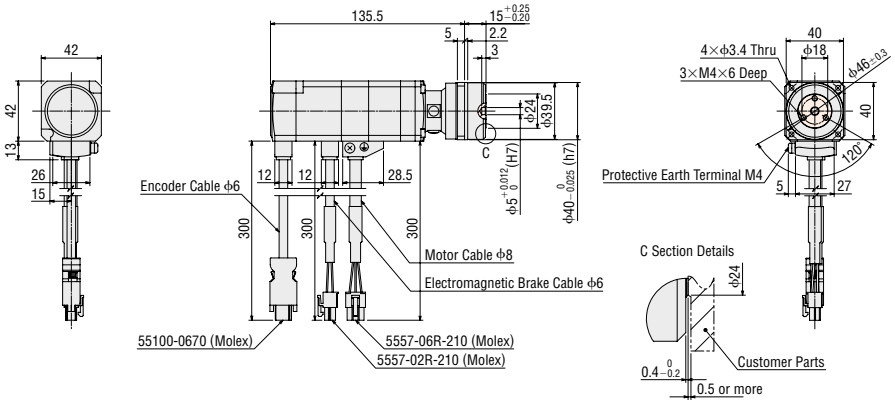

● The coloured part ▭ of the outline drawing is the rotation section.

● The ■ within the product name includes a number expressing the gear ratio.
A number indicating the desired length of **1** (1 m), **2** (2 m) or **3** (3 m) is entered where the box ◇ is located within the product name when the cable is included with the product.

Frame Size 60 mm

Product Name		Motor Product Name	Gear Ratio	Mass kg
Built-in Controller	Pulse-Input			
AZ66MKD-HP■F-◇	**AZ66MK-HP■F-◇**	AZM66MK-HP■F	**5**, **15**	2.2

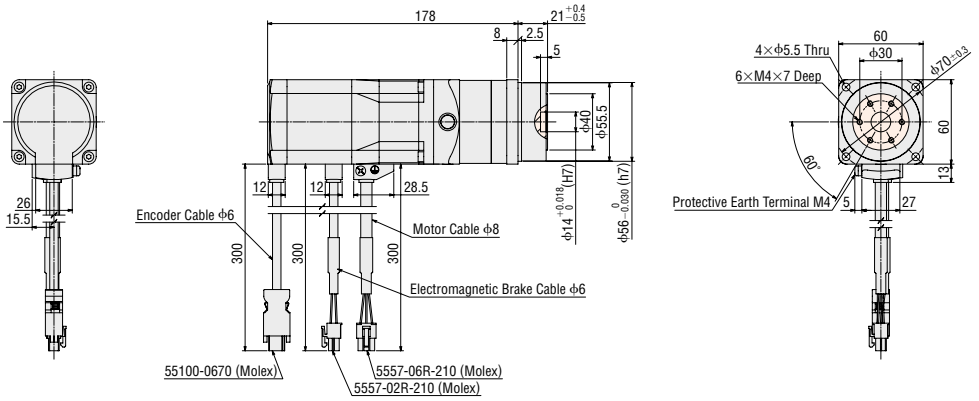

◇Harmonic Geared Type
Frame Size 42 mm

Product Name		Motor Product Name	Gear Ratio	Mass kg
Built-in Controller	Pulse-Input			
AZ46AKD-HS■-◇	**AZ46AK-HS■-◇**	AZM46AK-HS■	**50**, **100**	0.65

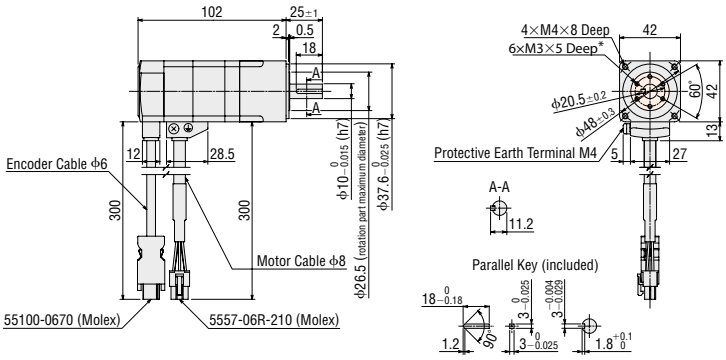

∗The position of the output shaft relative to the screw holes on the rotating part is arbitrary.

Frame Size 60 mm

Product Name		Motor Product Name	Gear Ratio	Mass kg
Built-in Controller	Pulse-Input			
AZ66AKD-HS■-◇	**AZ66AK-HS■-◇**	AZM66AK-HS■	**50**, **100**	1.4

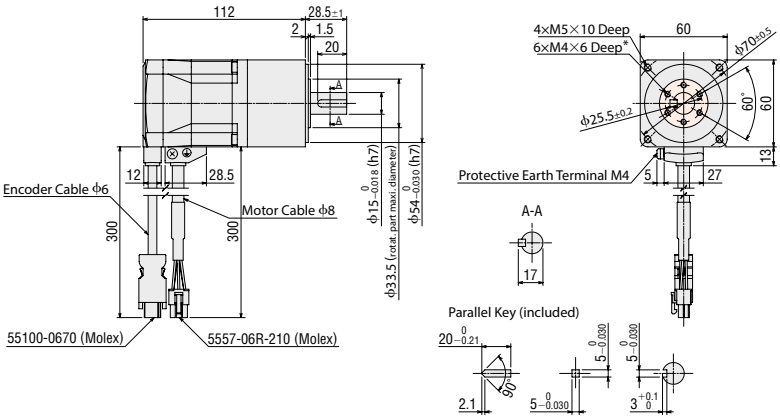

∗The position of the output shaft relative to the screw holes on the rotating part is arbitrary.

- The coloured part ▭ of the outline drawing is the rotation section.
- The ■ within the product name includes a number expressing the gear ratio.
  A number indicating the desired length of **1** (1 m), **2** (2 m) or **3** (3 m) is entered where the box ◇ is located within the product name when the cable is included with the product.

◇Harmonic Geared Type with Electromagnetic Brake

Frame Size 42 mm

Product Name		Motor Product Name	Gear Ratio	Mass kg
Built-in Controller	Pulse-Input			
AZ46MKD-HS■-◇	**AZ46MK-HS■-◇**	AZM46MK-HS■	**50**, **100**	0.82

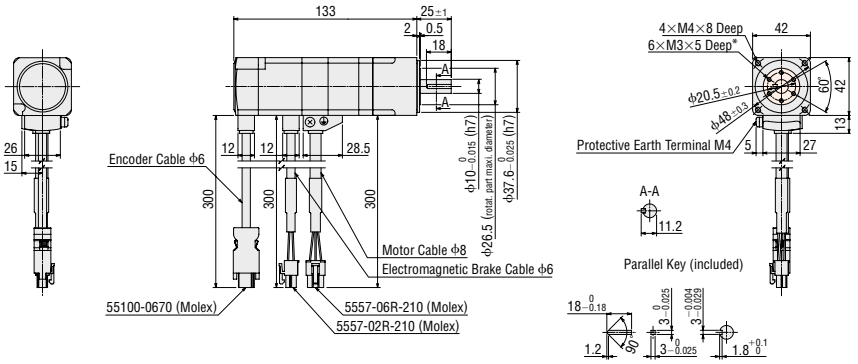

*The position of the output shaft relative to the screw holes on the rotating part is arbitrary.

Frame Size 60 mm

Product Name		Motor Product Name	Gear Ratio	Mass kg
Built-in Controller	Pulse-Input			
AZ66MKD-HS■-◇	**AZ66MK-HS■-◇**	AZM66MK-HS■	**50**, **100**	1.8

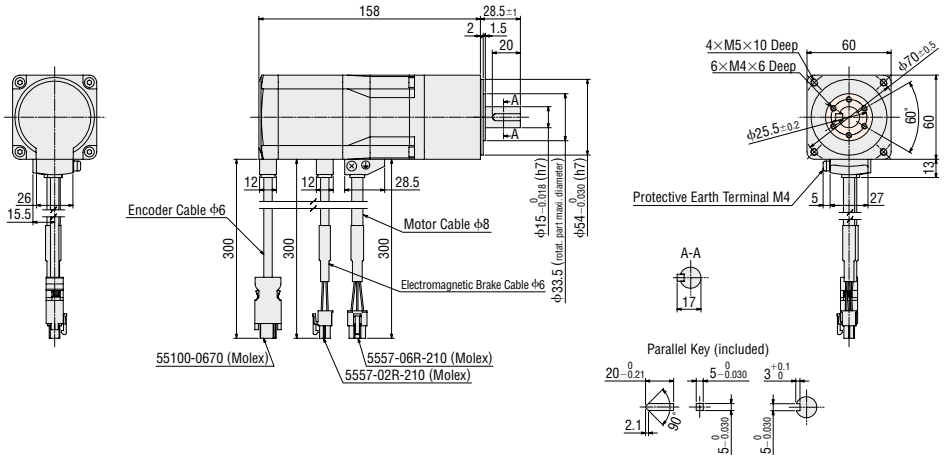

*The position of the output shaft relative to the screw holes on the rotating part is arbitrary.

● The coloured part ▭ of the outline drawing is the rotation section.
● The ■ within the product name includes a number expressing the gear ratio.
A number indicating the desired length of **1** (1 m), **2** (2 m) or **3** (3 m) is entered where the box ◇ is located within the product name when the cable is included with the product.

Drivers

◇Built-in Controller Type

Driver Product Name: AZD-KD
Mass: 0.15kg

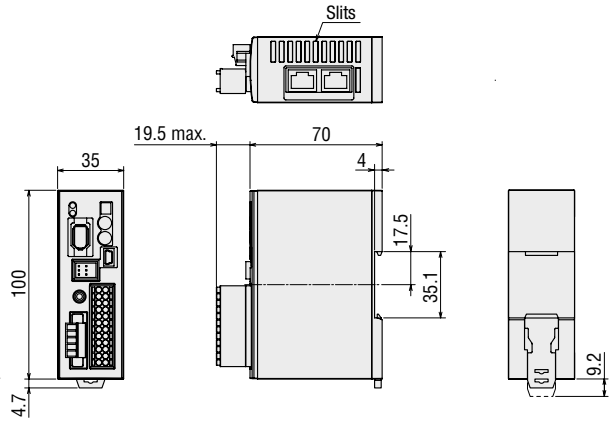

Accessories

Connector form in power/electromagnetic brake connections (CN1)
Connector: MC1,5/5-STF-3,5
(PHOENIX CONTACT GmbH & Co. KG)

Connector for Input/Output Signal (CN4)
Connector: DFMC1,5/12-ST-3,5
(PHOENIX CONTACT GmbH & Co. KG)

◇Pulse-Input Type

Driver Product Name: AZD-K
Mass: 0.15kg

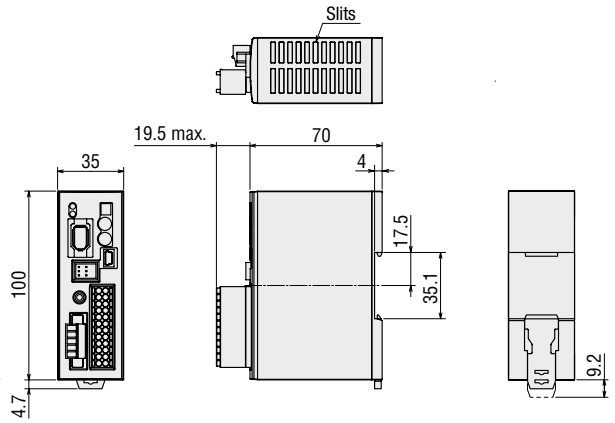

Accessories

Connector form in power/electromagnetic brake connections (CN1)
Connector: MC1,5/5-STF-3,5
(PHOENIX CONTACT GmbH & Co. KG)

Connector for Input/Output Signal (CN4)
Connector: DFMC1,5/12-ST-3,5
(PHOENIX CONTACT GmbH & Co. KG)

●Cable for Motor (sold separately), Cable for Encoder (sold separately), Cable for Electromagnetic Brake (sold separately)

●Only products with included connection cables

[**AZ14**, **AZ15**, **AZ24**, **AZ26** use]

◇Cable for Motor

Cable Type	Length L (m)
Cable for Motor 1 m	1
Cable for Motor 2 m	2
Cable for Motor 3 m	3

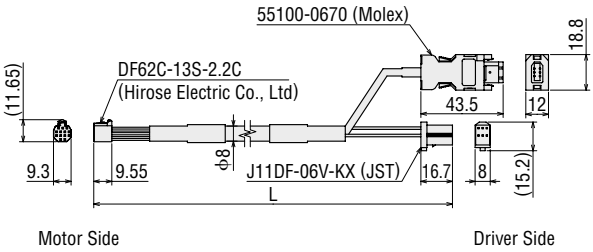

[**AZ46**, **AZ66**, **AZ69** use]

◇Cable for Motor

Cable Type	Length L (m)
Cable for Motor 1 m	1
Cable for Motor 2 m	2
Cable for Motor 3 m	3

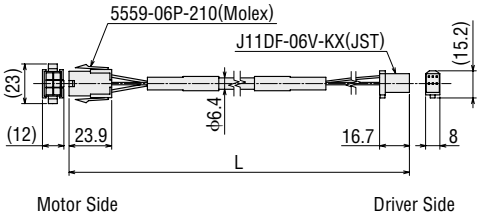

◇Cable for Encoder

Cable Type	Length L (m)
Cable for Encoder 1 m	1
Cable for Encoder 2 m	2
Cable for Encoder 3 m	3

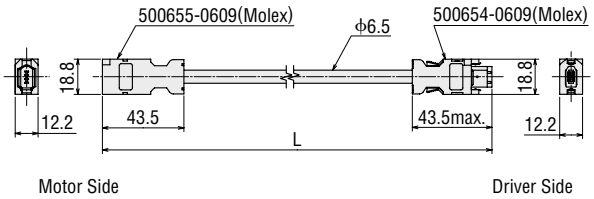

◇Cable for Electromagnetic Brake (Only for electromagnetic brake products)

Cable Type	Length L (m)
Cable for Electromagnetic Brake 1 m	1
Cable for Electromagnetic Brake 2 m	2
Cable for Electromagnetic Brake 3 m	3

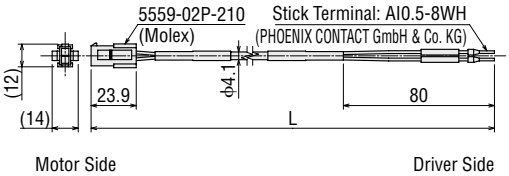

Notes

●The motor cable and the electromagnetic brake cable coming out of the motor cannot be connected directly to the driver. For connection to the driver use the accessory connection cable (sold separately) or the connection cable which is included to the product (for products with included cable).

Connection and Operation (Built-in Controller Type)

Name and Functions of Driver Parts

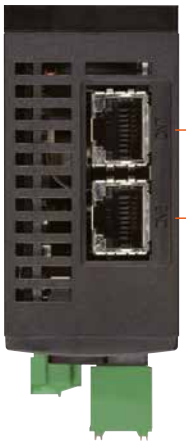

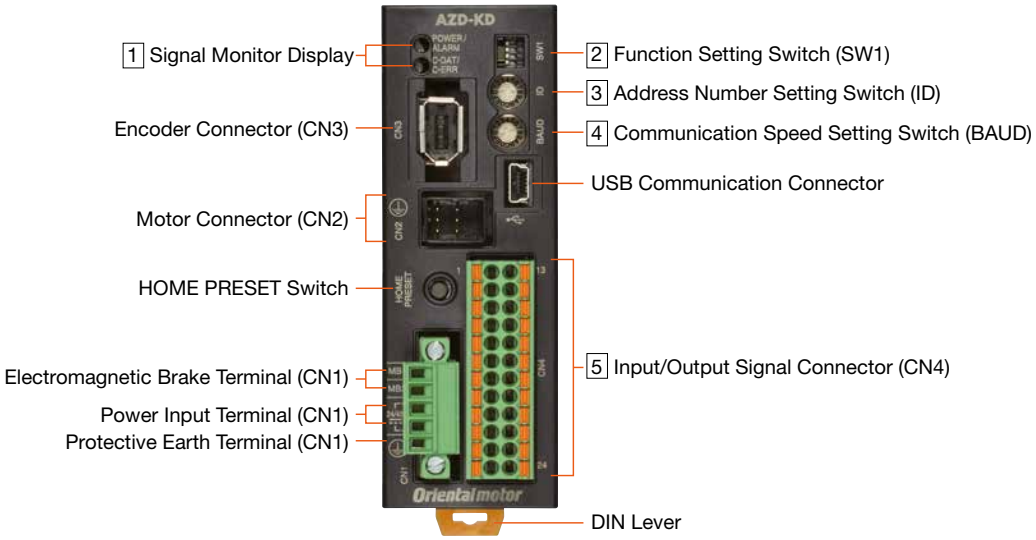

1 Signal Monitor Display

◇LED Display

Display	Colour	Function	When Activated
POWER	Green	Power Display	When power is on.
ALARM	Red	Alarm Display	Blinks when protective functions are activated.
C-DAT	Green	Communication Display	When communication data is received or sent.
C-ERR	Red	Communication Error Display	When there is an error with communication data.

2 Function Setting Switch

Display	No.	Function
SW1	1	This sets the address number in combination with the address number setting switch (ID) (Factory Setting: OFF).
	2	This sets the protocol for RS-485 communication (Factory Setting: OFF).
	3	Set the RS-485 communication terminal resistor (120Ω) (Factory Setting: OFF). OFF: no terminal resistor, ON: terminal resistor connected.
	4	

✻Please use the same settings for both No. 3 and No. 4.

3 Address Number Setting Switch (ID)

Display	Function
ID	Set the address number for RS-485 communication (Factory Setting: 0).

4 Communication Speed Setting Switch

Display	Function
BAUD	Set this when using RS-485 communications. Set the communication speed (Factory Setting: 7).

◇Settings of the RS-485 Communication Speed

No.	Baud Rate (bps)
0	9600
1	19200
2	38400
3	57600
4	115200
5	230400
6	Not used
7	Network Converter
8–F	Not used

5 Input/Output Signal Connector (CN4)

Display	Pin Number	Signal Name	Content	
CN4	1	IN0	START	This signal is used to start positioning operation.
	2	IN2	M1	Use the 3 bits of M0, M1, M2, to select the drive data No.
	3	IN4	ZHOME	Move to the home position set with the HOME PRESET switch.
	4	IN6	STOP	Stop the motor.
	5	IN-COM [0–7]*1	IN0~IN7 input common	
	6	IN8	FW-JOG	Start JOG operation.
	7	OUT0	HOME-END	Output when determining the home position or completing high speed point of return-to-home operation.
	8	OUT2	PLS-RDY	Not used
	9	OUT4	MOVE	Output while operating the motor.
	10	OUT-COM*1	Output common	
	11	ASG+	A phase pulse output+	
	12	BSG+	B phase pulse output+	
	13	IN1	M0	Use the 3 bits of M0, M1, M2, to select the drive data No.
	14	IN3	M2	Use the 3 bits of M0, M1, M2, to select the drive data No.
	15	IN5	FREE	The motor is set to non-excitation.
	16	IN7	ALM-RST	Reset the alarm.
	17	IN-COM [8-9]*1	IN8, IN9 input common	
	18	IN9	RV-JOG	Start JOG operation.
	19	OUT1	IN-POS	Output when the motor operation is complete.
	20	OUT3	READY	Output when the driver is ready for operation.
	21	OUT5	ALM-B	Output the driver alarm state (normal close).
	22	GND*1	Ground	
	23	ASG−	A phase pulse output−	
	24	BSG−	B phase pulse output−	

●Assigned functions are set by means of the parameter settings. The above is the initial value. For details, refer to the User's Manual.
*1 The initial value setting cannot be changed.

●Connection Diagram

◇Connection to Peripheral Equipment

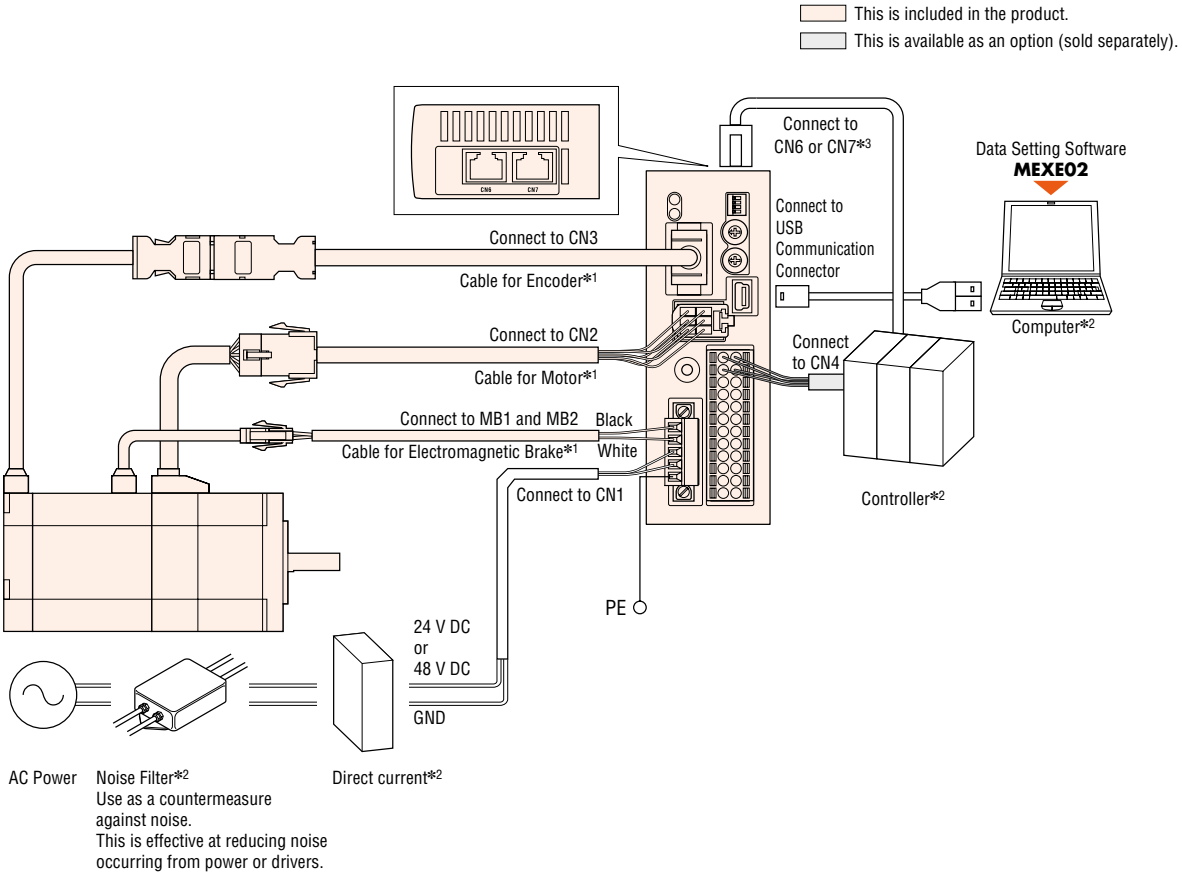

*1 Products with cable for connecting between motor and driver (1 m, 2 m, 3 m) are available as well as those to which such cable is not attached.
Cables longer than 3 m or flexible cables can be selected as an option (sold separately).
Make sure a cabling distance between the motor and the driver is 20 m or less.
*2 Prepared by the customer.
*3 When controlling with RS-485 communications, connect to the controller.

◇USB Cable Connection

The computer on which the data setting software **MEXE02** is installed and driver are connected with a USB cable.
Use the following specifications for the USB cable.

Specification	USB2.0 (full speed)
Cable	Length: 3 m (or less)
	Format: A-mini-B

◇Connecting to a Host Controller

•Connecting to a Current Sink Output Circuit

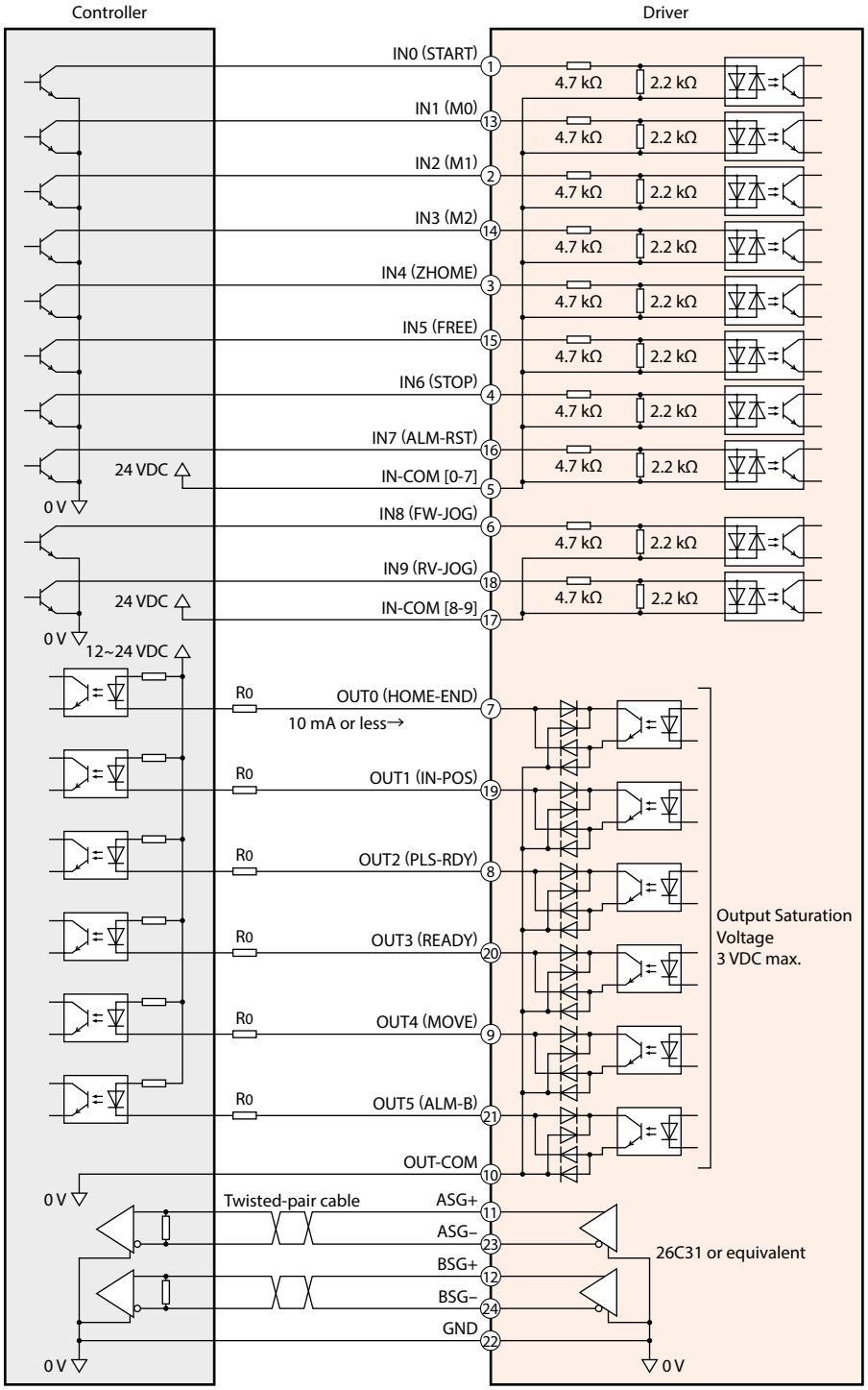

Notes

- For the input signal, use 24 VDC.
- For the output signal, use 12~24 VDC 10 mA or less. Where the current value exceeds 10 mA , connect an external resistor R_0 to reduce the current to 10 mA or less.
- Make sure the signal line is wired at a distance of 200 mm or longer from the power lines (power supply line and motor line). Furthermore, do not insert the signal line in the same pipe as the power lines or bundle them together.
- When noise is emitted from the motor cable or power cable due to wiring or allocation and it cause a problem, use shields or ferrite cores.

◇Connecting to a Host Controller

•Connecting to a Current Source Output Circuit

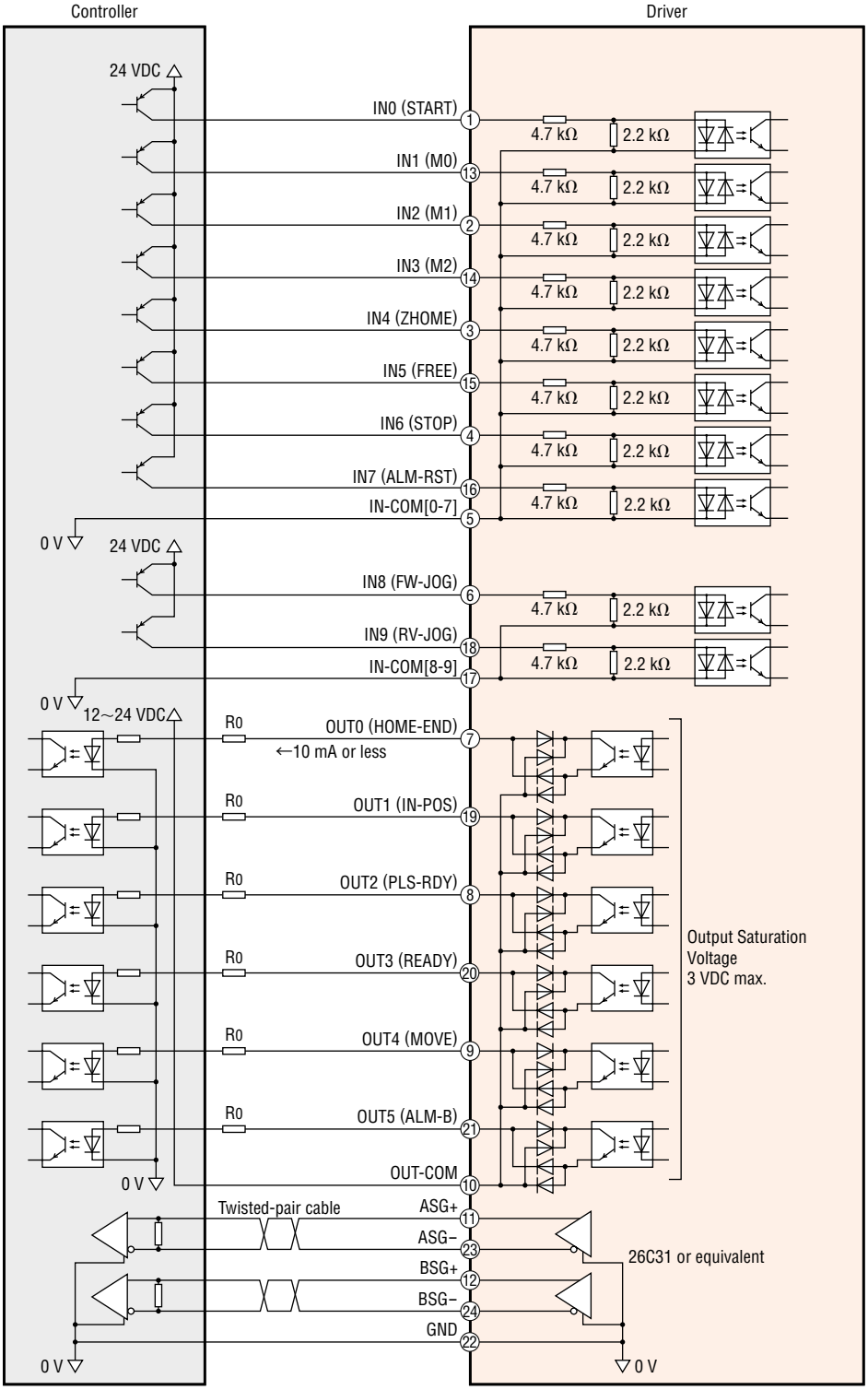

Notes

- For the input signal, use 24 VDC.
- For the output signal, use 12~24 VDC 10 mA or less. Where the current value exceeds 10 mA , connect an external resistor R_0 to reduce the current to 10 mA or less.
- Make sure the signal line is wired at a distance of 200 mm or longer from the power line (power supply line and motor line). Furthermore, do not insert the signal line in the same pipe as the power lines or bundle them together.
- When noise is emitted from the motor cable or power cable due to wiring or allocation and it cause a problem, use shields or ferrite cores.

Connection and Operation (Pulse-Input Type)

Names and Functions of Driver Parts

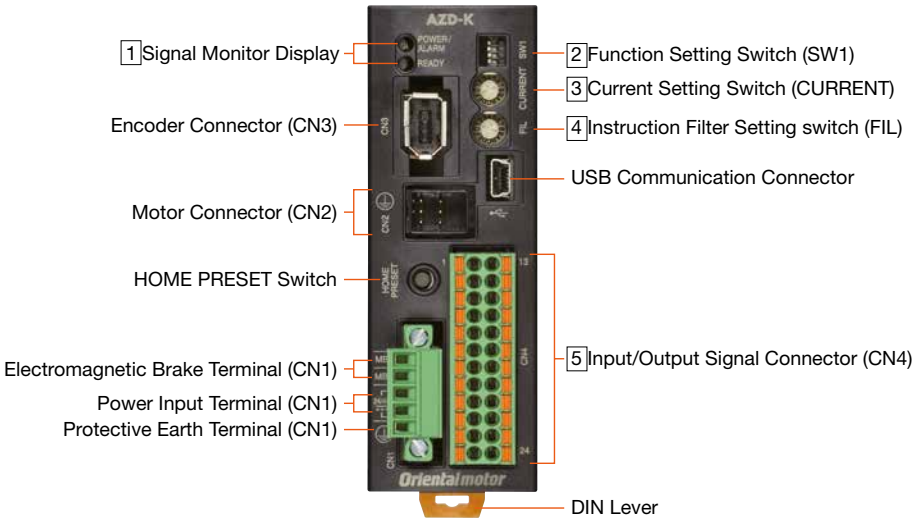

1 Signal Monitor Display

◇LED Display

Display	Colour	Function	When Activated
POWER	Green	Power Display	When power is on.
ALARM	Red	Alarm Display	Blinks when protective functions are activated.
READY	Green	READY output	When READY output is set to ON

2 Function Setting Switch

Display	No.	Function
SW1	1	Set the resolution for each motor output axis rotation (Factory Setting : OFF [1000p/r]).
	2	Set the pulse input format to 1 pulse input mode or 2 pulse input mode. (Factory Setting: OFF [2 pulse input mode])
	3, 4	Not used

3 Current Setting Switch

Display	Function
CURRENT	Set basic current that is the base for the operation current and stop current (Factory Setting: F).

4 Command Filter Setting Switch

Display	Function
FIL	Adjust the responsiveness of the motor (Factory Setting: 1).

5 Input/Output Signal Connector (CN4)

Display	Pin Number	Signal Name	Content	
CN4	1	CW+[PLS+]*1	CW pulse input+[pulse input+]	
	2	CCW+[DIR+]*1	CCW pulse input+[rotation direction input+]	
	3	IN4	ZHOME	Move to the home position set with the HOME PRESET switch.
	4	IN6	STOP	Stop the motor.
	5	IN-COM [4–7]*1	IN4–IN7 input common	
	6	IN8	FW-JOG	Start JOG operation.
	7	OUT0	HOME-END	Output when determining the home position or completing high speed home position return operation.
	8	OUT2	PLS-RDY	Output when the pulse input preparation is complete.
	9	OUT4	MOVE	Output while operating the motor.
	10	OUT-COM*1	Output common	
	11	ASG+	A phase pulse output+	
	12	BSG+	B phase pulse output+	
	13	CW−[PLS−]*1	CW pulse input−[pulse input−]	
	14	CCW−[DIR−]*1	CCW pulse input−[rotation direction input−]	
	15	IN5	FREE	The motor is set to non-excitation.
	16	IN7	ALM-RST	Reset the alarm.
	17	IN-COM [8–9]*1	IN8, IN9 input common	
	18	IN9	RV-JOG	Start JOG operation.
	19	OUT1	IN-POS	Output when the motor operation is complete.
	20	OUT3	READY	Outputs when the driver is ready for operation.
	21	OUT5	ALM-B	Output the driver alarm state (normal close).
	22	GND*1	Ground	
	23	ASG−	A phase pulse output−	
	24	BSG−	B phase pulse output−	

●Assigned functions are set by means of the parameter settings. The above is the initial value. For details, refer to the User's Manual.
*1 The initial value setting cannot be changed.

●Connection Diagram

◇Connection to Peripheral Equipment

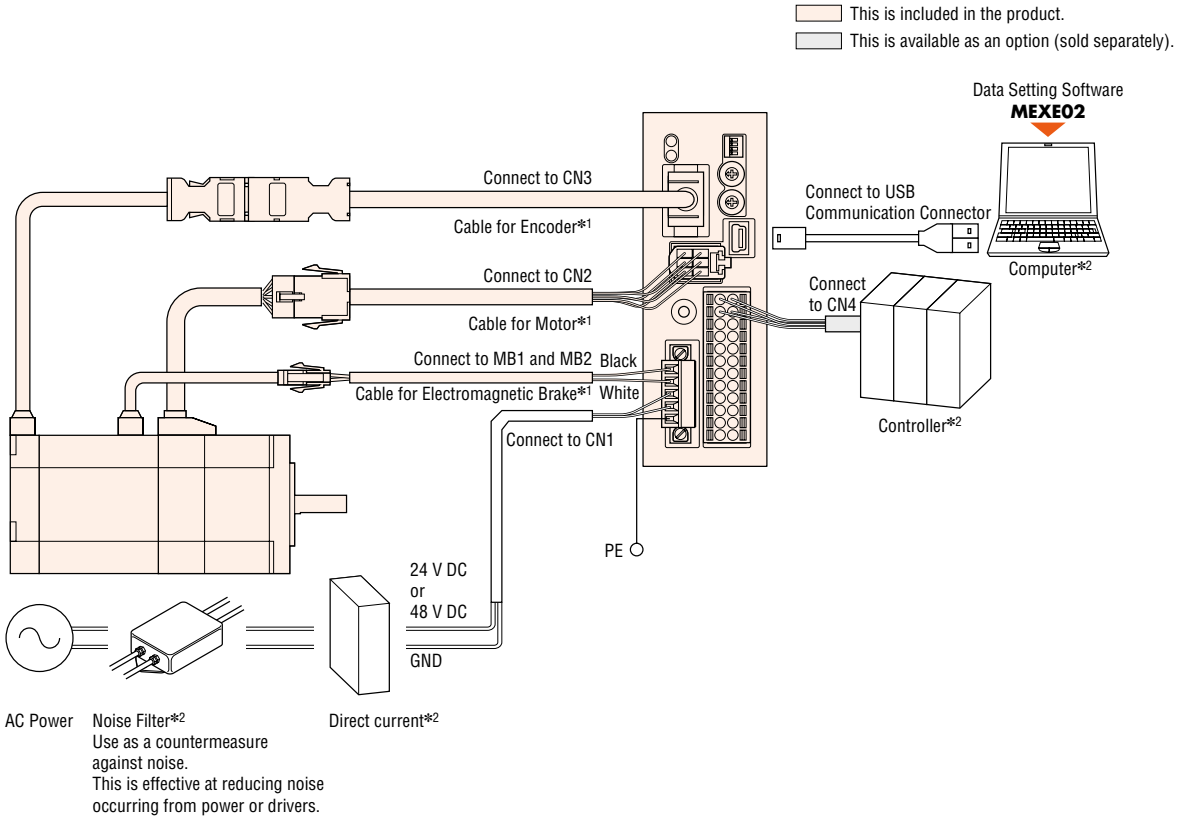

*1 Products with cable for connecting between motor and driver (1 m, 2 m, 3 m) are available as well as those to which such cable is not attached.
Cables longer than 3 m or flexible cables can be selected as an option (sold separately).
Make sure a cabling distance between the motor and the driver is 20 m or less.

*2 Prepared by the customer.

◇USB Cable Connection

The computer on which the data setting software **MEXE02** is installed and driver are connected with a USB cable.
Use the following specifications for the USB cable.

Specification	USB2.0 (full speed)
Cable	Length: 3 m (or less)
	Format: A-mini-B

◇Connecting to a Host Controller

•Connecting to a Current Sink Output Circuit

When the pulse input is a line driver

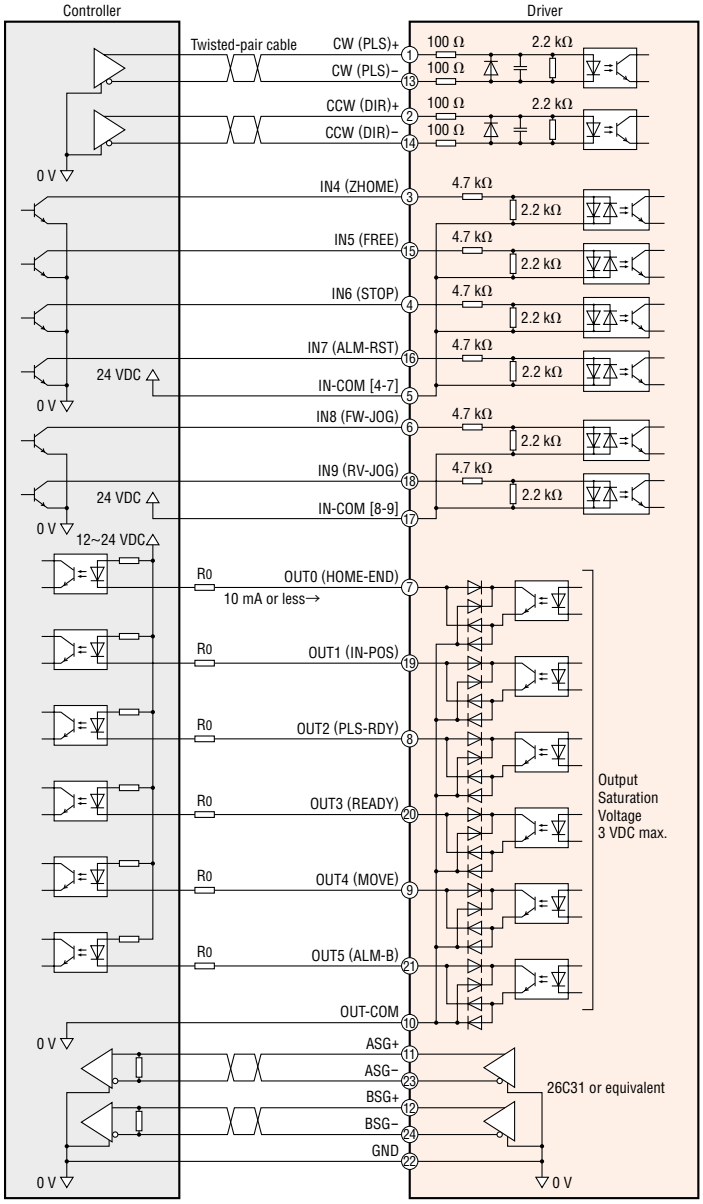

Notes

- For the input signal, use 24 VDC.
- For the output signal, use 12~24 VDC 10 mA or less. Where the current value exceeds 10 mA , connect an external resistor R_0 to reduce the current to 10 mA or less.
- Make sure the signal line is wired at a distance of 200 mm or longer from the power line (power supply line and motor line).
  Furthermore, do not insert the signal line in the same pipe as the power lines or bundle them together.
- When noise is emitted from the motor cable or power cable due to wiring or allocation and it cause a problem, use shields or ferrite cores.

When the pulse input is an open collector

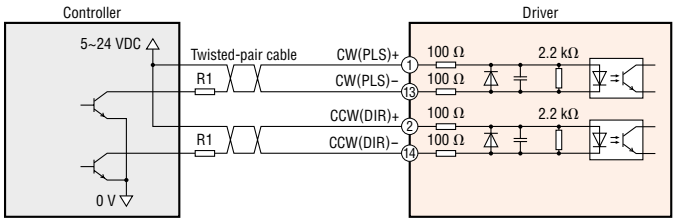

Notes

- For CW (PLS) input and CCW (DIR) input, use 5~24 VDC. Where the voltage exceeds 5 VDC, connect an external resistor R_1 to adjust the input current to be 7~20mA.

◇Connecting to a Host Controller

•Connecting to a Current Source Output Circuit

When the pulse input is a line driver

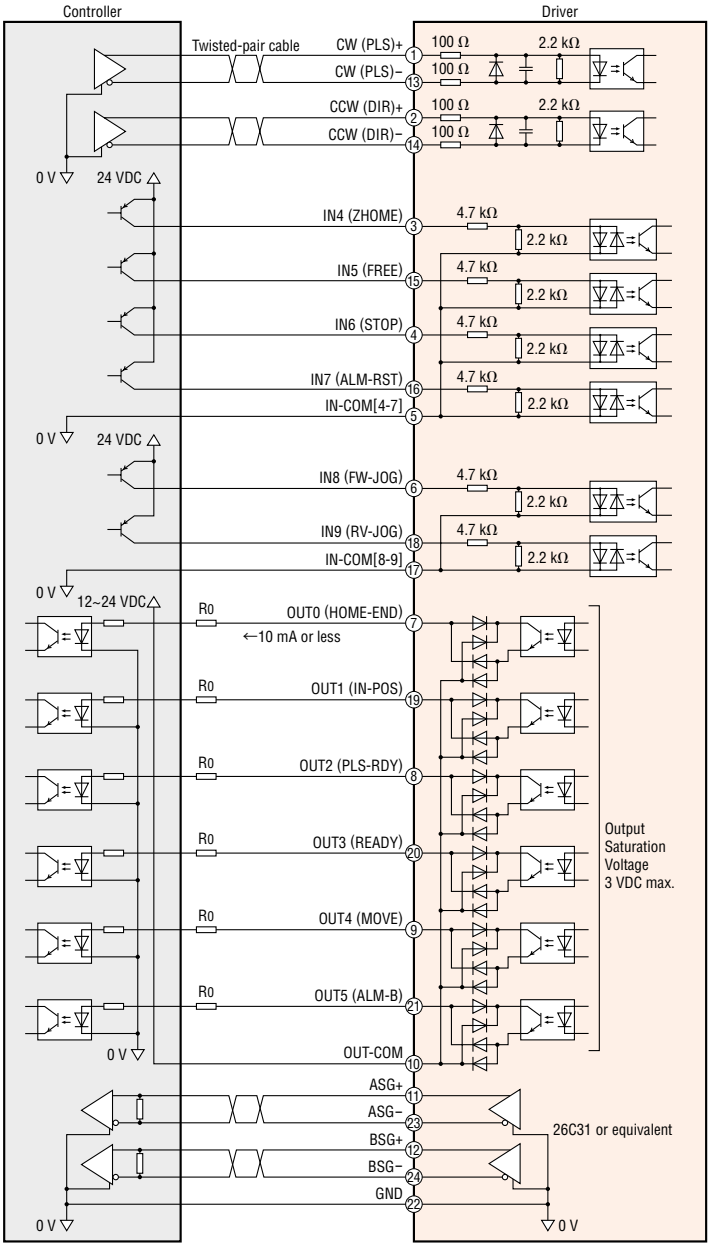

Notes

- For the input signal, use 24 VDC.
- For the output signal, use 12~24 VDC 10 mA or less. Where the current value exceeds 10 mA, connect to an external resistor R_0 to reduce the current to 10 mA or less.
- Make sure the signal line is wired at a distance of 200 mm or longer from the power line (power supply line and motor line).
  Furthermore, do not insert the signal line in the same pipe as the power lines or bundle them together.
- When noise is emitted from the motor cable or power cable due to wiring or allocation and it cause a problem, use shields or ferrite cores.

When the pulse input is an open collector

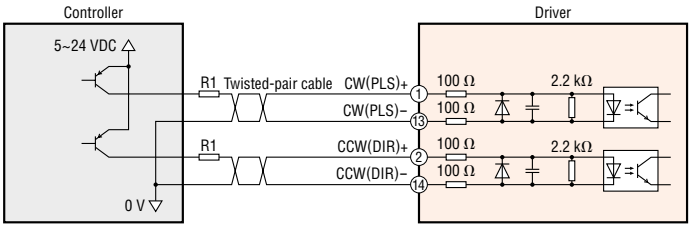

Notes

- For CW (PLS) input and CCW (DIR) input, use 5~24 VDC. Where the voltage exceeds 5 VDC, connect an external resistor R_1 to adjust the input current to be 7~20mA.

Motor and Driver Combinations

The product names for the motors and drivers comprising a unit are as follows.

Built-in Controller Type

Type	Product Name	Motor Product Name	Driver Product Name
Standard Type	**AZ14AKD-◇**	AZM14AK	AZD-KD
	AZ15AKD-◇	AZM15AK	
	AZ24AKD-◇	AZM24AK	
	AZ26AKD-◇	AZM26AK	
	AZ46□KD-◇	AZM46□K	
	AZ66□KD-◇	AZM66□K	
	AZ69□KD-◇	AZM69□K	
TS Geared Type	**AZ46□KD-TS■-◇**	AZM46□K-TS■	
	AZ66□KD-TS■-◇	AZM66□K-TS■	
PS Geared Type	**AZ46□KD-PS■-◇**	AZM46□K-PS■	
	AZ66□KD-PS■-◇	AZM66□K-PS■	
HPG Geared Type	**AZ46□KD-HP■-◇**	AZM46□K-HP■	
	AZ46□KD-HP■F-◇	AZM46□K-HP■F	
	AZ66□KD-HP■-◇	AZM66□K-HP■	
	AZ66□KD-HP■F-◇	AZM66□K-HP■F	
Harmonic Geared Type	**AZ46□KD-HS■-◇**	AZM46□K-HS■	
	AZ66□KD-HS■-◇	AZM66□K-HS■	

Pulse-Input Type

Type	Product Name	Motor Product Name	Driver Product Name
Standard Type	**AZ14AK-◇**	AZM14AK	AZD-K
	AZ15AK-◇	AZM15AK	
	AZ24AK-◇	AZM24AK	
	AZ26AK-◇	AZM26AK	
	AZ46□K-◇	AZM46□K	
	AZ66□K-◇	AZM66□K	
	AZ69□K-◇	AZM69□K	
TS Geared Type	**AZ46□K-TS■-◇**	AZM46□K-TS■	
	AZ66□K-TS■-◇	AZM66□K-TS■	
PS Geared Type	**AZ46□K-PS■-◇**	AZM46□K-PS■	
	AZ66□K-PS■-◇	AZM66□K-PS■	
HPG Geared Type	**AZ46□K-HP■-◇**	AZM46□K-HP■	
	AZ46□K-HP■F-◇	AZM46□K-HP■F	
	AZ66□K-HP■-◇	AZM66□K-HP■	
	AZ66□K-HP■F-◇	AZM66□K-HP■F	
Harmonic Geared Type	**AZ46□K-HS■-◇**	AZM46□K-HS■	
	AZ66□K-HS■-◇	AZM66□K-HS■	

Either **A** (single shaft) or **M** (electromagnetic brake) indicating the configuration is entered where the box □ is located within the product name.
The ■ within the product name includes a number expressing the gear ratio.
A number indicating the desired length of **1** (1 m), **2** (2 m) or **3** (3 m) is entered where the box ◇ is located within the product name when the cable is included with the product.

Accessories (Sold separately)

Connection Cable Sets, Flexible Connection Cable Sets Extension Cable Sets, Flexible Extension Cable Sets

In the **AZ** series, there are products with cable for connecting between motor and driver (1 m, 2 m, 3 m) as well as those to which such cable is not attached.
When using the motor and driver more than 3 m apart, choose the connection cable set or extension cable set.
The extension cable maximum extension length is 20 m (including attached cable).
For the standard motor, the cable for motor cable and the cable for encoder make up the set. Whereas for the magnetic brake-attached motor, the cable for motor, the cable for encoder and the cable for magnetic brake make up the set.
If the cable becomes bent, use the flexible connection cable set or flexible extension cable set.

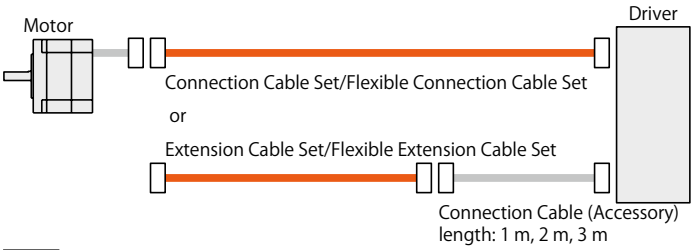

Notes
- Cables for motor and magnetic brake from the motor cannot be connected directly to the driver. When connecting to the driver, use the optional (sold separately) connection cable or the connection cable attached to the product (only for types with a connection cable attached).

AC Input

Connection Cable Sets, Flexible Connection Cable Sets

Product Line

Connection Cable Sets

◇For Standard Motor

Cable for Motor　Cable for Encoder

Product Name	Length L (m)
CC010VZF	1
CC020VZF	2
CC030VZF	3
CC050VZF	5
CC070VZF	7
CC100VZF	10
CC150VZF	15
CC200VZF	20

◇For Electromagnetic Brake Motor

Cable for Motor　Cable for Encoder　Cable for Electromagnetic Brake

Product Name	Length L (m)
CC010VZFB	1
CC020VZFB	2
CC030VZFB	3
CC050VZFB	5
CC070VZFB	7
CC100VZFB	10
CC150VZFB	15
CC200VZFB	20

Flexible Connection Cable Sets

◇For Standard Motor

Cable for Motor　Cable for Encoder

Product Name	Length L (m)
CC010VZR	1
CC020VZR	2
CC030VZR	3
CC050VZR	5
CC070VZR	7
CC100VZR	10
CC150VZR	15
CC200VZR	20

◇For Electromagnetic Brake Motor

Cable for Motor　Cable for Encoder　Cable for Electromagnetic Brake

Product Name	Length L (m)
CC010VZRB	1
CC020VZRB	2
CC030VZRB	3
CC050VZRB	5
CC070VZRB	7
CC100VZRB	10
CC150VZRB	15
CC200VZRB	20

Extension Cable Sets, Flexible Extension Cable Set

Product Line

Extension Cable Sets

◇For Standard Motor

Cable for Motor　　Cable for Encoder

Product Name	Length L (m)
CC010VZFT	1
CC020VZFT	2
CC030VZFT	3
CC050VZFT	5
CC070VZFT	7
CC100VZFT	10
CC150VZFT	15

◇For Electromagnetic Brake Motor

Cable for Motor　　Cable for Encoder　　Cable for Electromagnetic Brake

Product Name	Length L (m)
CC010VZFBT	1
CC020VZFBT	2
CC030VZFBT	3
CC050VZFBT	5
CC070VZFBT	7
CC100VZFBT	10
CC150VZFBT	15

Flexible Extension Cable Sets

◇For Standard Motor

Cable for Motor　　Cable for Encoder

Product Name	Length L (m)
CC010VZRT	1
CC020VZRT	2
CC030VZRT	3
CC050VZRT	5
CC070VZRT	7
CC100VZRT	10
CC150VZRT	15

◇For Electromagnetic Brake Motor

Cable for Motor　　Cable for Encoder　　Cable for Electromagnetic Brake

Product Name	Length L (m)
CC010VZRBT	1
CC020VZRBT	2
CC030VZRBT	3
CC050VZRBT	5
CC070VZRBT	7
CC100VZRBT	10
CC150VZRBT	15

Dimensions (Unit = mm)

Connection Cable

◇Motor Cable

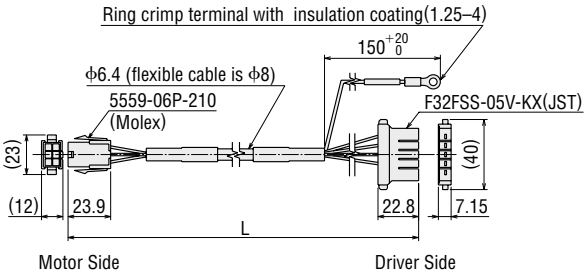

◇Encoder Cable

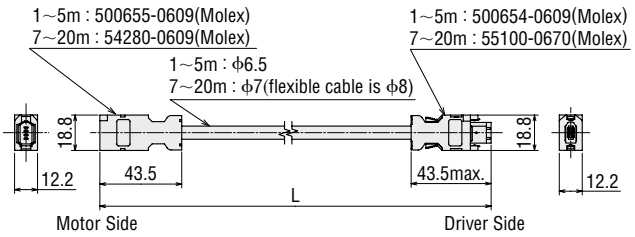

◇Electromagnetic Brake Cable

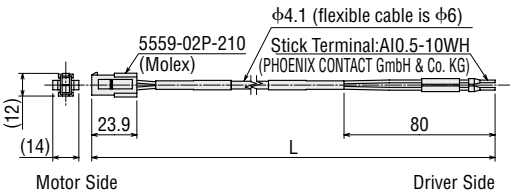

Extension Cable

◇Motor Cable

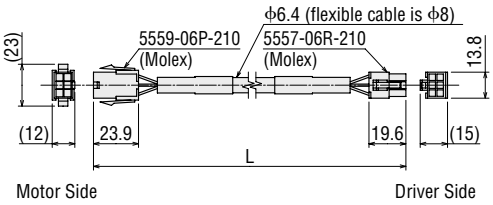

◇Encoder Cable

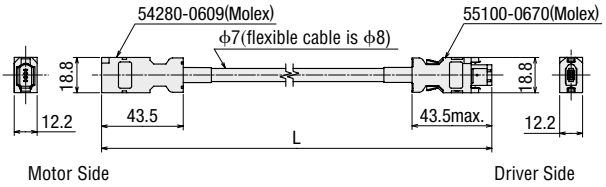

◇Electromagnetic Brake Cable

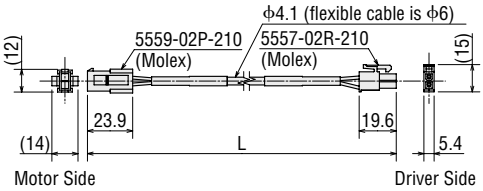

Connection Cable Sets, Flexible Connection Cable Sets

Product Line

[For **AZ14**, **AZ15**, **AZ24**, **AZ26**]

Connection Cable

◇For Standard Motor

Product Name	Length L (m)
CC010VZ2F2	1
CC020VZ2F2	2
CC030VZ2F2	3
CC050VZ2F2	5
CC070VZ2F2	7
CC100VZ2F2	10
CC150VZ2F2	15
CC200VZ2F2	20

Flexible Connection Cable

◇For Standard Motor

Product Name	Length L (m)
CC010VZ2R2	1
CC020VZ2R2	2
CC030VZ2R2	3
CC050VZ2R2	5
CC070VZ2R2	7
CC100VZ2R2	10
CC150VZ2R2	15
CC200VZ2R2	20

[For **AZ46**, **AZ66**, **AZ69**]

Connection Cable Sets

◇For Standard Motor

Cable for Motor

Cable for Encoder

Product Name	Length L (m)
CC010VZF2	1
CC020VZF2	2
CC030VZF2	3
CC050VZF2	5
CC070VZF2	7
CC100VZF2	10
CC150VZF2	15
CC200VZF2	20

◇For Electromagnetic Brake Motor

Cable for Motor

Cable for Encoder

Cable for Electromagnetic Brake

Product Name	Length L (m)
CC010VZFB2	1
CC020VZFB2	2
CC030VZFB2	3
CC050VZFB2	5
CC070VZFB2	7
CC100VZFB2	10
CC150VZFB2	15
CC200VZFB2	20

Flexible Connection Cable Sets

◇For Standard Motor

Cable for Motor

Cable for Encoder

Product Name	Length L (m)
CC010VZR2	1
CC020VZR2	2
CC030VZR2	3
CC050VZR2	5
CC070VZR2	7
CC100VZR2	10
CC150VZR2	15
CC200VZR2	20

◇For Electromagnetic Brake Motor

Cable for Motor

Cable for Encoder

Cable for Electromagnetic Brake

Product Name	Length L (m)
CC010VZRB2	1
CC020VZRB2	2
CC030VZRB2	3
CC050VZRB2	5
CC070VZRB2	7
CC100VZRB2	10
CC150VZRB2	15
CC200VZRB2	20

Extension Cable Sets, Flexible Extension Cable Sets

Product Line

[For **AZ14**, **AZ15**, **AZ24**, **AZ26**]

●Extension Cable

◇For Standard Motor

Product Name	Length L (m)
CC010VZ2FT	1
CC020VZ2FT	2
CC030VZ2FT	3
CC050VZ2FT	5
CC070VZ2FT	7
CC100VZ2FT	10
CC150VZ2FT	15

●Flexible Extension Cable

◇For Standard Motor

Product Name	Length L (m)
CC010VZ2RT	1
CC020VZ2RT	2
CC030VZ2RT	3
CC050VZ2RT	5
CC070VZ2RT	7
CC100VZ2RT	10
CC150VZ2RT	15

[For **AZ46**, **AZ66**, **AZ69**]

●Extension Cable Sets

◇For Standard Motor

Cable for Motor　　Cable for Encoder

Product Name	Length L (m)
CC010VZFT	1
CC020VZFT	2
CC030VZFT	3
CC050VZFT	5
CC070VZFT	7
CC100VZFT	10
CC150VZFT	15

◇For Electromagnetic Brake Motor

Cable for Motor　　Cable for Encoder　　Cable for Electromagnetic Brake

Product Name	Length L (m)
CC010VZFBT	1
CC020VZFBT	2
CC030VZFBT	3
CC050VZFBT	5
CC070VZFBT	7
CC100VZFBT	10
CC150VZFBT	15

●Flexible Extension Cable Sets

◇For Standard Motor

Cable for Motor　　Cable for Encoder

Product Name	Length L (m)
CC010VZRT	1
CC020VZRT	2
CC030VZRT	3
CC050VZRT	5
CC070VZRT	7
CC100VZRT	10
CC150VZRT	15

◇For Electromagnetic Brake Motor

Cable for Motor　　Cable for Encoder　　Cable for Electromagnetic Brake

Product Name	Length L (m)
CC010VZRBT	1
CC020VZRBT	2
CC030VZRBT	3
CC050VZRBT	5
CC070VZRBT	7
CC100VZRBT	10
CC150VZRBT	15

Dimensions (Unit = mm)

[For **AZ14**, **AZ15**, **AZ24**, **AZ26**]

Connection Cable

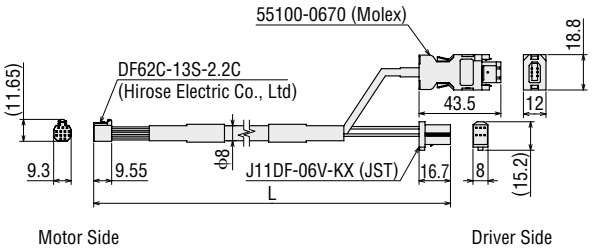

Extension Cable

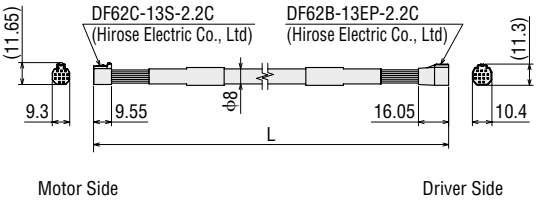

[For **AZ46**, **AZ66**, **AZ69**]

Connection Cable

◇Cable for Motor

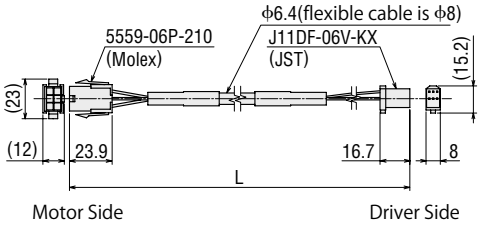

◇Cable for Encoder

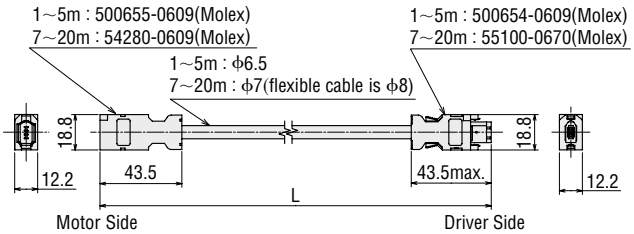

◇Cable for Electromagnetic Brake

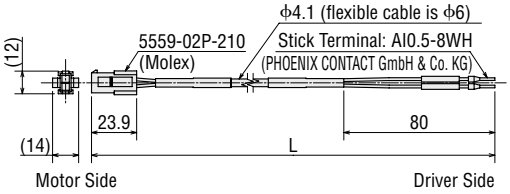

Extension Cable

◇Cable for Motor

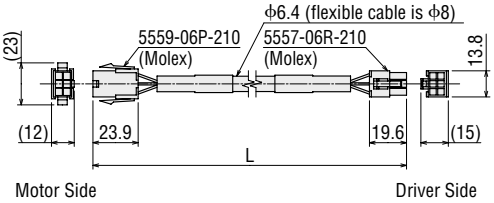

◇Cable for Encoder

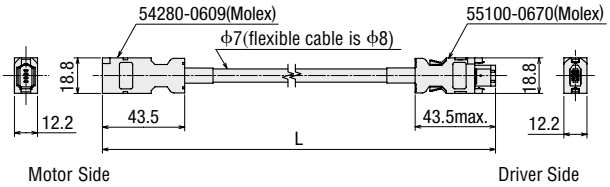

◇Cable for Electromagnetic Brake

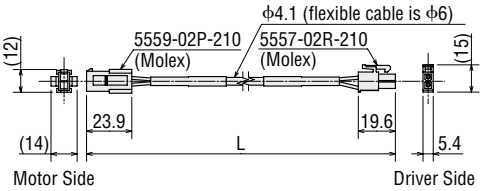

Notes on Use of a Flexible Cable

① Do not allow the cable to bend at the cable connector.

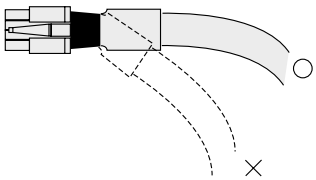

② For the bending radius, use at six times or more of the cable diameter.

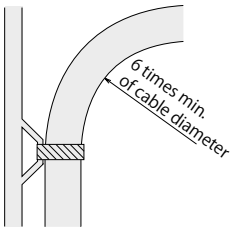

③ The cable wired from the motor or the cable comes as a set of the motor should not be bended. Use a flexible motor cable, if the cable will be bend.

- Flexible Connection Cable

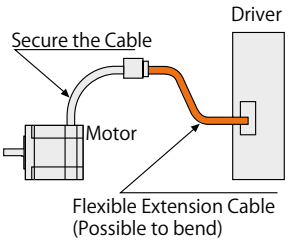

- Flexible Extension Cable

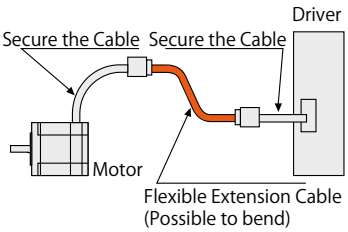

Data Setting Software MEXE02

From the computer, it is not only possible to set and edit driving data and the various parameters, but also to monitor the waveforms of teaching, I/O and driving speed.
The data setting software is available for download from our website.
Furthermore, the data setting software is distributed on a CD-ROM.
For details, ask from our website or inquire at your nearest branch or sales office.

Operating Environment

Computer

Recommended CPU*1	Intel Core Processor 2 GHz or more (The OS must be supported.)
Display	high resolution video adapter and monitor, XGA (1024x768) or more.
Recommended Memory*1	32 bit (x86) version: 1 GB or more 64 bit (x64) version: 2 GB or more
Hard Disk*2	Available disk space of 60 MB or more
USB Port	USB2.0 1 port
Disk Device	CD-ROM drive (use for installation of software)

*1 The OS operating conditions need to be satisfied.
*2 Microsoft .NET Framework 4 Client Profile is required to use MEXE02. If it is not already installed, it will be installed automatically, in which case up to 1.5 GB of additional space is required.

- Windows and Windows Vista are registered trademarks of Microsoft Corporation in the United States and other countries. Pentium is a trademark of Intel Corporation.
- Please refer to our website for the latest update of operating environment.

Notes

- The required volume of memory or hard disk may vary depending on the system environment.

Operating Systems (OS)

Both the 32-bit (x86) and 64 bit (x64) editions are supported.

- Microsoft Windows XP Service Pack 3*
- Microsoft Windows Vista Service Pack 2
- Microsoft Windows 7 Service Pack 1
- Microsoft Windows 8
- Microsoft Windows 8.1

*This works with Service Pack 2 when using 64 bit (x64) edition.

Connection between Computer and Driver

Use the following specifications for the USB cable.

Specification	USB2.0 (full speed)
Cable	Length: 3 m (or less) Format: A-mini-B

Generic Cable for Input/Output Signals

This is a convenient multi-core cable for connecting the driver and upper level controller.
Choose the necessary cable in accordance with the number of connecting I/O signals.

Product Line

Lead wire No. of cores	Cable Length			
	0.5 m	1 m	1.5 m	2 m
6	CC06D005B-1	CC06D010B-1	CC06D015B-1	CC06D020B-1
10	CC10D005B-1	CC10D010B-1	CC10D015B-1	CC10D020B-1
12	CC12D005B-1	CC12D010B-1	CC12D015B-1	CC12D020B-1
16	CC16D005B-1	CC16D010B-1	CC16D015B-1	CC16D020B-1

Dimensions (Unit = mm)

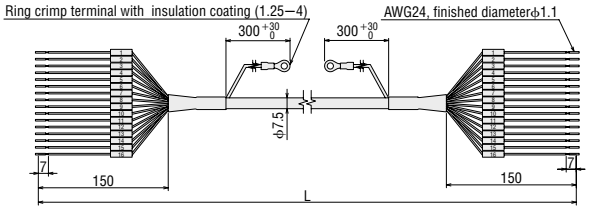

- The outline drawing is of 16 cores.

RS-485 Communication Cable

The cable is to link drivers when the driver is being operated under multi-axis mode, it also connects the network converter and driver.

Product Line

Product Name	Applicable Product	Length L (m)
CC001-RS4	DC Power Supply Input Driver	0.1
CC002-RS4	AC Power Supply Input Driver DC Power Supply Input Driver	0.25

Dimensions (Unit = mm)

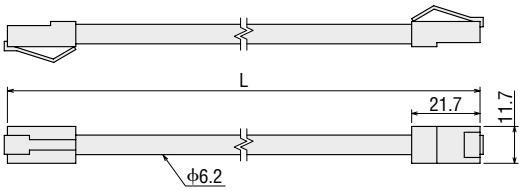

MCV Couplings

This is a one piece structure coupling with the vibration-proof rubber formed between the aluminium alloy hubs.

Product Line

Product Name
MCV15□
MCV25□
MCV30□

● A number indicating the coupling inner diameter is entered where the box is located within the product name.

Product Number Code

MCV 25 10 12

① ② ③ ④

①	**MCV** Couplings
②	Outer Diameter of Coupling
③	Inner Diameter d1 (smaller inner diameter) (**06A** represents ϕ6.35 mm)
④	Inner Diameter d2 (larger inner diameter) (**06A** represents ϕ6.35 mm)

● For inner diameter d1, the smaller of the motor shaft diameter or the driven shaft diameter is entered.
For inner diameter d2, the larger of the motor shaft diameter or the driven shaft diameter is entered.

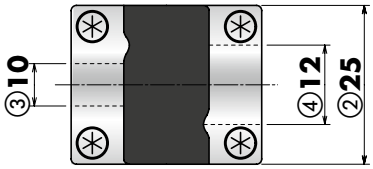

Coupling Selection Table

● Coupling is selected based on the following content.
· The motor output torque is within the generic torque for coupling.
· Motor shaft diameter

Applicable Product			Coupling Type	Motor Shaft Diameter mm		Driven Shaft Diameter mm									
Type	Frame Size	Product Name				**03**	**04**	**05**	**06**	**06A**	**08**	**10**	**12**	**14**	**15**
						ϕ3	ϕ4	ϕ5	ϕ6	ϕ6.35	ϕ8	ϕ10	ϕ12	ϕ14	ϕ15
Standard Type	20 mm	**AZ14, AZ15**	**MCV15**	**04**	ϕ4		●	●	●						
	28 mm	**AZ24, AZ26**		**05**	ϕ5	●	●	●	●						
	42 mm	**AZ46**		**06**	ϕ6		●	●	●						
	60 mm	**AZ66, AZ69**	**MCV25**	**10**	ϕ10				●	●	●	●	●		
	85 mm	**AZ98, AZ911**	**MCV30**	**14**	ϕ14						●	●	●	●	●

● The applicable product name includes the characters that can distinguish the product name.

MCS Couplings

This is a three piece structure coupling comprised of aluminium alloy hubs and resin spiders.

Product Line

Product Name
MCS20□
MCS30□
MCS40□
MCS55□
MCS65□

● A number indicating the coupling inner diameter is entered where the box □ is located within the product name.

Product Number Code

MCS 30 10 12

① ② ③ ④

①	**MCS** Couplings
②	Outer Diameter of Coupling
③	Inner Diameter d1 (smaller inner diameter) (**F04** represents ϕ6.35 mm)
④	Inner Diameter d2 (larger inner diameter) (**F04** represents ϕ6.35 mm)

● For inner diameter d1, the smaller of the motor shaft diameter or the driven shaft diameter is entered.
For inner diameter d2, the larger of the motor shaft diameter or the driven shaft diameter is entered.

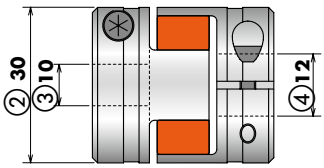

Coupling Selection Table

● Coupling is selected based on the following content.
· The motor output torque is within the generic torque for coupling.
· Motor shaft diameter

● When using the parallel key, choose an appropriate coupling for the parallel key.

Applicable Product			Gear Ratio	Coupling Type	Motor Shaft Diameter mm		Driven Shaft Diameter mm													
Type	Frame Size	Product Name					05	06	F04	08	10	12	14	15	16	18	20	22	24	25
							ϕ5	ϕ6	ϕ6.35	ϕ8	ϕ10	ϕ12	ϕ14	ϕ15	ϕ16	ϕ18	ϕ20	ϕ22	ϕ24	ϕ25
TS Geared Type	42 mm	**AZ46-TS□**	**3.6, 7.2**	**MCS20**	**06**	ϕ6	●	●	●	●	●									
			10, 20, 30	**MCS30**				●	●	●	●	●	●	●	●					
	60 mm	**AZ66-TS□**	**3.6, 7.2**	**MCS30**	**10**	ϕ10		●	●	●	●	●	●	●	●					
			10, 20, 30	**MCS40**						●	●	●	●	●	●	●	●			
	90 mm	**AZ98-TS□**	**3.6, 7.2, 10**	**MCS55**	**18**	ϕ18						●	●	●	●	●	●	●	●	
			20, 30	**MCS65**											●	●	●	●	●	●
PS Geared Type	42 mm	**AZ46-PS□**	**5**	**MCS20**	**10**	ϕ10	●	●	●	●	●									
			7.2, 10, 25, 36, 50	**MCS30**				●	●	●	●	●	●	●	●					
	60 mm	**AZ66-PS□**	**5, 7.2**	**MCS40**	**12**	ϕ12				●	●	●	●	●	●	●	●			
			10, 25, 36, 50	**MCS55**								●	●	●	●	●	●	●	●	
	90 mm	**AZ98-PS□**	**5, 7.2**	**MCS55**	**18**	ϕ18						●	●	●	●	●	●	●	●	
			10, 25, 36, 50	**MCS65**											●	●	●	●	●	●
HPG Geared Type	40 mm	**AZ46-HP□**	**5, 9**	**MCS30**	**10**	ϕ10		●	●	●	●	●	●	●	●					
	60 mm	**AZ66-HP□**	**5, 15**	**MCS55**	**16**	ϕ16						●	●			●				
	90 mm	**AZ98-HP□**	**5, 15**	**MCS65**	**25**	ϕ25										●	●			
Harmonic Geared Type	42 mm	**AZ46-HS□**	**50, 100**	**MCS40**	**10**	ϕ10				●	●	●	●	●	●	●	●			
	60 mm	**AZ66-HS□**	**50, 100**	**MCS55**	**15**	ϕ15						●	●			●				

● The applicable product name includes the characters that can distinguish the product name.
● The □ within the product name includes a number expressing the reduction ratio.

Motor Mounting Brackets

Mounting brackets are convenient for installation and securing a stepping motor and geared stepping motor.
The attachment fitting fixing section is a convenient long hole specification for adjusting belt tension after assembling the motor.

Product Line

Standard Type

Material: Aluminum Alloy (SPCC)*
Surface processing: paint (electroless nickel plating)*

Product Name	Motor Frame Size	Applicable Product
PFB28A	28 mm	**AZ24**, **AZ26**
PAF0P	42 mm	**AZ46**
PAL0P		
PAL2P-5	60 mm	**AZ66**, **AZ69**
PAL4P-5	85 mm	**AZ98**

*The **PFB28A** specification is indicated within ( ).
● These mounting brackets can be perfectly fitted to the pilot of the stepping motors. (Except for **PAL0P**)
● There is a motor attachment screw attached.

TS Geared Type

Material: Aluminum Alloy
Surface processing: painting

Product Name	Motor Frame Size	Applicable Product
SOL0B	42 mm	**AZ46**
SOL2M4	60 mm	**AZ66**
SOL5M8	90 mm	**AZ98**

PS Geared Type

Material: SS400
Surface processing: electroless nickel plating

Product Name	Motor Frame Size	Applicable Product
PLA60G	60 mm	**AZ66**
PLA90G	90 mm	**AZ98**

● There is a motor attachment screw attached.

Harmonic Geared Type

Material: SS400
Surface processing: electroless nickel plating

Product Name	Motor Frame Size	Applicable Product
PLA60H	60 mm	**AZ66**
PLA90H	90 mm	**AZ98**

● There is a motor attachment screw attached.

Motor Mounting Direction

The motor cable comes out at right angles to the motor. Orient the motor so that the cable faces either upward or sideways.
● For **PLA60G**, **PLA90G**, **PLA60H**, **PLA90H**: The cable can face downward.

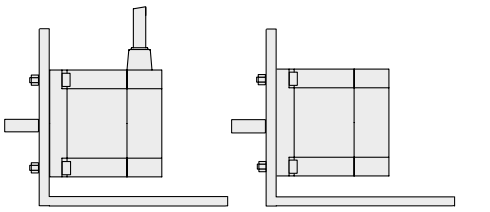

How to mount the motor

1 **PAL2P-5**, **SOL2M4**
PAL4P-5, **SOL5M8**

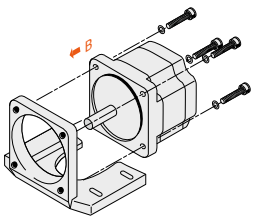

① Use the screws provided to secure the motor to the mounting bracket.
② Attach the motor from the direction shown by the arrow (B).

2 **PAL0P**, **SOL0B**

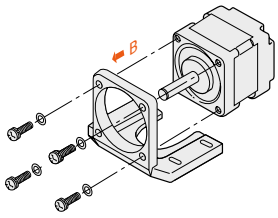

① Use the screws provided to secure the motor to the mounting bracket.
② Attach the motor from the direction shown by the arrow (B).

3 **PAF0P**, **PFB28A**

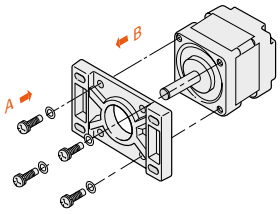

① Use the screws provided to secure the motor to the mounting bracket.
② Attach motor from the direction shown by either arrow (A) or arrow (B).

4 **PLA60G**, **PLA60H**
PLA90G, **PLA90H**

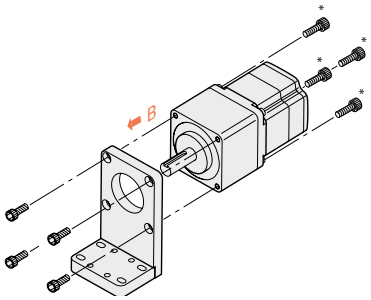

① Use the screw to attach the motor to the attachment fitting.
② Attach the motor from the direction shown by the arrow (B).
* Motor mounting hole on **PLA90H** is processed with tapping. Insert the screw from direction B.

Dimensions (Unit = mm)

PFB28A

Mass: 25 g

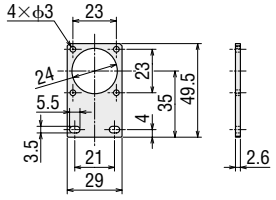

●Mounting Screws: M2.5 Length 5 mm
Included 4 pieces

PAF0P

Mass: 30 g

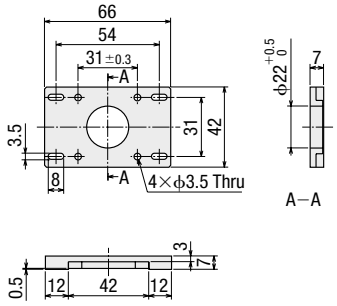

●Mounting Screws: M3 Length 7 mm
Included 4 pieces

PAL0P

Mass: 35 g

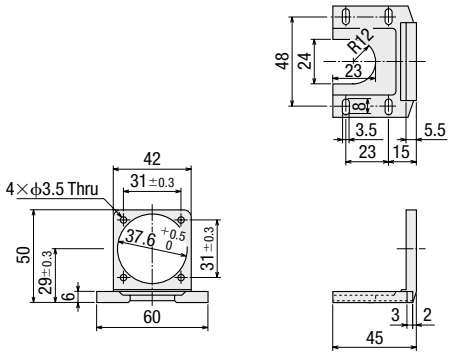

●Mounting Screws: M3 Length 10 mm
Included 4 pieces

PAL2P-5

Mass: 110 g

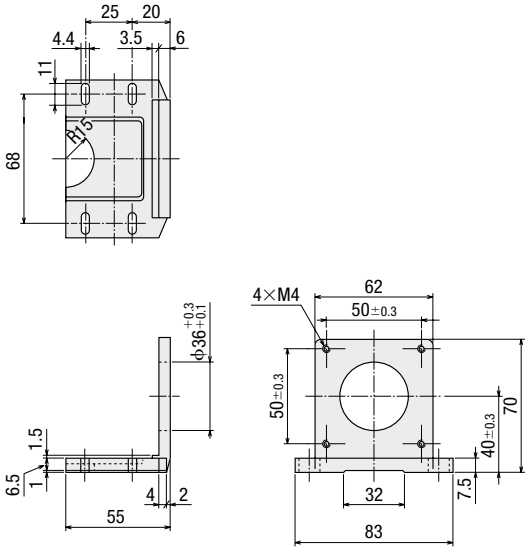

●Mounting Screws: M4 Length 12 mm
Included 4 pieces

PAL4P-5

Mass: 250 g

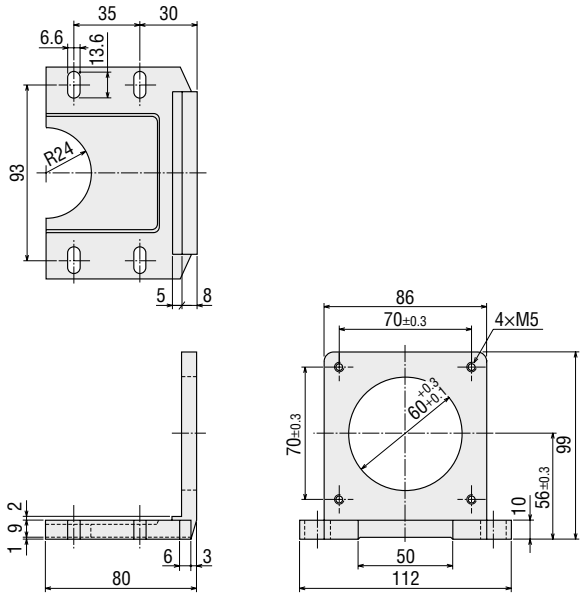

●Mounting Screws: M5 Length 16 mm
Included 4 pieces

SOL0B

Mass: 85 g

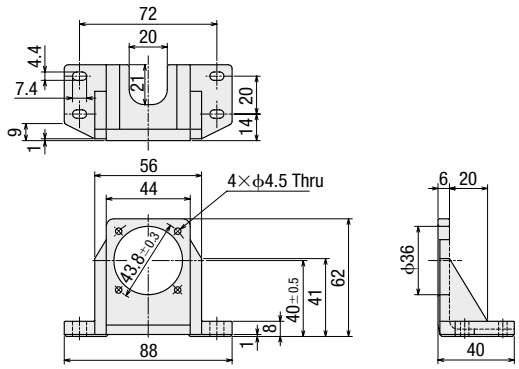

SOL2M4

Mass: 135 g

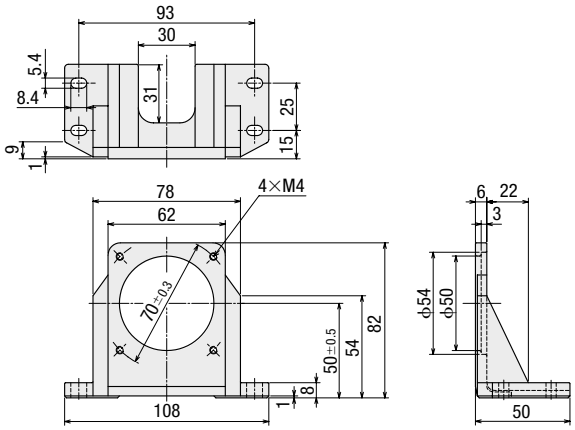

SOL5M8

Mass: 270 g

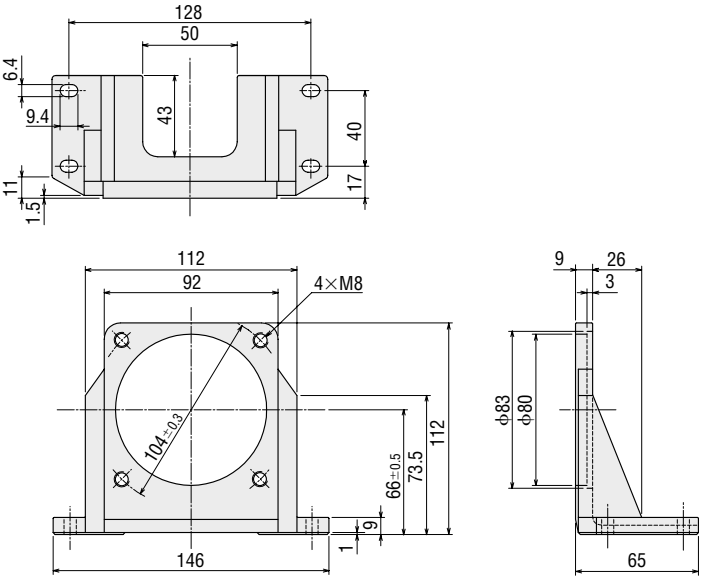

PLA60G

Mass: 0.7 kg

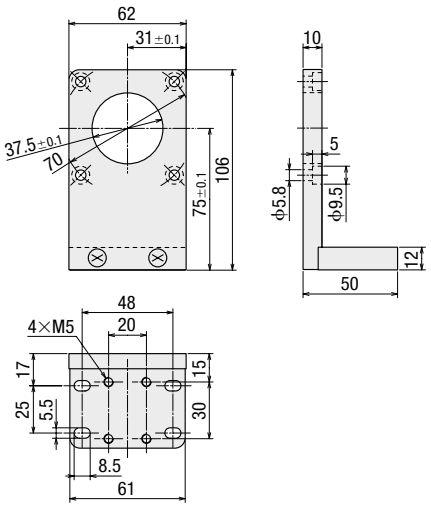

● Mounting Screws: M5 Length 15 mm
Included 4 pieces

PLA60H

Mass: 0.7 kg

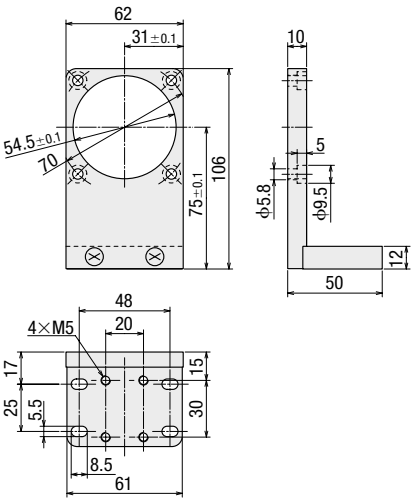

● Mounting Screws: M5 Length 15 mm
Included 4 pieces

PLA90G

Mass: 1.6 kg

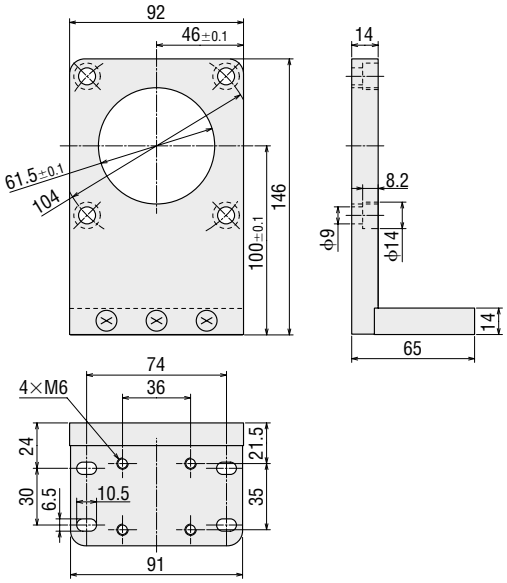

● Mounting Screws: M8 Length 20 mm
Included 4 pieces

PLA90H

Mass: 1.6 kg

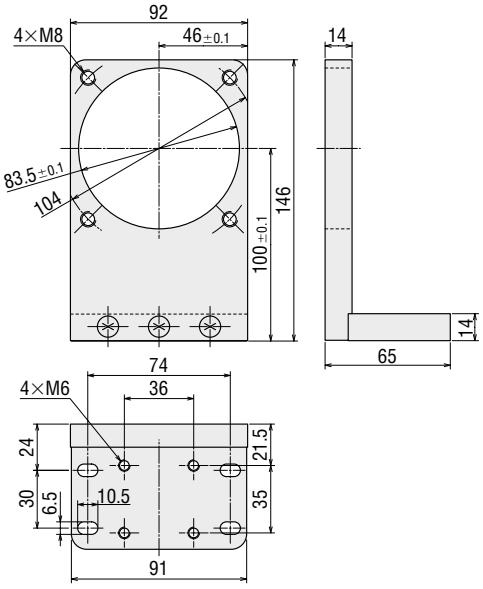

● Mounting Screws: M8 Length 30 mm
Included 4 pieces, 4 washers

Network Converters

Network converter is a transducer from the host communication protocol to our unique RS-485 communication protocol. By using this network converter, our RS-485 compatible products can be controlled under host communication environment.

Product Line

Network Type	Product Name
CC-Link Ver. 1.1 Compatible	**NETC01-CC**
MECHATROLINK-Ⅱ Compatible	**NETC01-M2**
MECHATROLINK-Ⅲ Compatible	**NETC01-M3**
EtherCAT Compatible	**NETC01-ECT**

Controllers

Equipped with program editing and execution functions, the highly-functional and sophisticated **SCX11** controller is now available. Use the **SCX11** as a stored program controller to connect to any of Oriental Motor's standard pulse input drivers.
The **SCX11** is also able to control the motor via various serial ports such as USB, RS-232C and **CAN**open

- 100 Sequence Programs can be Stored
- Easy Operation
- Intelligent Setting

Product Line

Product Name	Driver Product Name
SCX11	AZD-C, AZD-A, AZD-K

These products are manufactured at plants certified with the international standards **ISO 9001** (for quality assurance) and **ISO 14001** (for systems of environmental management).

Specifications are subject to change without notice.

This catalogue was published in November 2015.

ORIENTAL MOTOR (EUROPA) GmbH

www.orientalmotor.de

European Headquarters
Schiessstraße 74
40549 Düsseldorf, Germany
Tel: 0211-5206700 Fax: 0211-52067099

Other countries:

www.orientalmotor.eu

ORIENTAL MOTOR (UK) LTD.

www.oriental-motor.co.uk

UK Headquarters
Unit 5, Faraday Office Park,
Rankine Road, Basingstoke,
Hampshire RG24 8AH, U.K.
Tel: 01256-347090 Fax: 01256-347099

ORIENTAL MOTOR (FRANCE) SARL

www.orientalmotor.fr

France Headquarters
56, Rue des Hautes Pâtures
92000 Nanterre Cedex, France
Tel: 01 47 86 97 50 Fax: 01 47 82 45 16

ORIENTAL MOTOR ITALIA s.r.l.

www.orientalmotor.it

Italy Headquarters
Via A. De Gasperi, 85
20017 Mazzo di Rho (MI), Italy
Tel: 02-93906346 Fax: 02-93906348

ORIENTAL MOTOR CO., LTD.

www.orientalmotor.co.jp

Headquarters
4-8-1 Higashiueno
Taito-ku, Tokyo 110-8536, Japan
Tel: (03)6744 -0361 Fax: (03)5826-2576

Customer Center (Support in German & English)

00800 - 22 55 66 22*
CA LL OM CC

Mon - Thu: 08:00 - 17:30 CET Friday: 08:00 - 16:00 CET

* Free Call Europe

info@orientalmotor.de

For more information please contact:

UK/112015/VERS01

Printed in Germany