Color Mark Photoelectric Sensors

GD-BC Series

INSTRUCTION MANUAL



Safety Warning

- Do not use in an environment with flammable, explosive or corrosive gases.
- Do not use in an environment with oil or chemicals.
- Do not use in an environment with high humidity.
- Do not use in direct sunlight.
- Do not use under other environmental conditions that exceed the rated value.
- Do not disassemble, repair or modify the product without permission.

End-of-life Disposal

When the product is disposed of, please dispose of it as industrial waste.

Specification

Model	GD-BC 15-LDT-C	GD-BC 15-LDT-C-P
Output type	NPN open-collector transistor: the max inflow current is 50mA; The applied voltage is below 30VDC(Between output and 0V); Residual voltage is less than 1.5V(When inflow current is 50mA)	PNP open-collector transistor: the max inflow current is 50mA; The applied voltage is below 30VDC(Between output and +V); Residual voltage is less than 1.5V(When inflow current is 50mA)
Detection distance	18-28mm	
Supply voltage	24VDC±10% Ripple P-P< 10%	
Current consumption	Power<850mW(Supply voltage is 24V、Consumption current<35mA)	
Response time	<200μs	
Mode switch input (Color mark mode)	Low(ON) 0-0.6VDC; Leakage current is below 0.5mA; Input impedance is about 10kΩ.	Low(OFF) 0-0.6VDC or open
Mode switch input (Color mode)	High(OFF) 12-24VDC or open	High(ON) 12-24VDC; Leakage current is below 3mA; Input impedance is about 10kΩ.
Output operation	Color mark mode: ON when color mark detection; Color mode: ON when consistent	
Light source	Composite LED:Red/Green/Blue (Light source wavelength:640nm/525nm/470nm)	
Environment humidity	35...85%RH (No condensation)	
Ambient temperature	-10...55°C(No condensing、No condensation)	
Short circuit protection	Built-in	
Connection method	2m cable(0.2mm² 4-pins cable)	
Housing material	ABS engineering plastics	
Weight	About 104g	

Panel Introduction

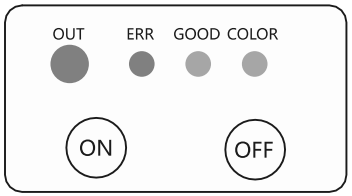

Dimensions

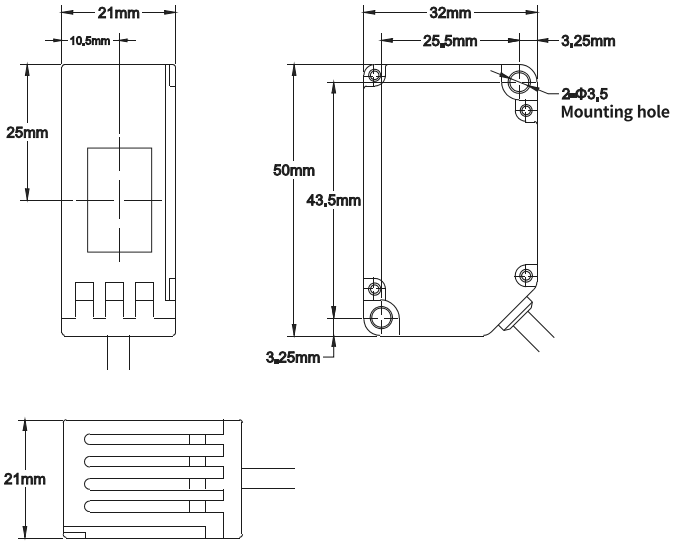

Wiring Diagram

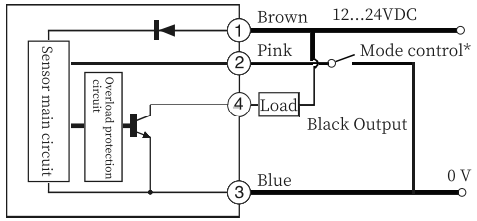

NPN Output

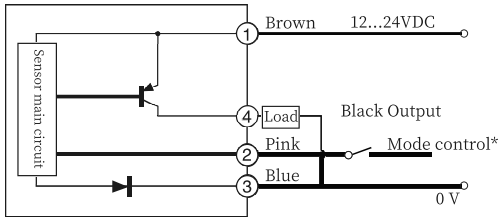

PNP Output

When the pink line is disconnected (OFF), it's color mode;
When the pink line is connected (ON), it's color mark mode.

Installation Instructions

Please pay attention to the installation direction of the sensor when detecting the movement direction of the object. The tightening torque should be below 0.8N · m.

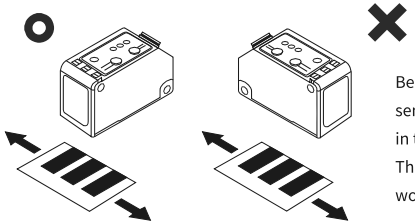

Be careful not to use sensors to detect objects in this direction.
This may lead to unstable work.

Operation setting teaching method

Before performing teaching settings, confirm the color mark mode or color mode settings first."COLOR" green indicator light is always on for color mode, and off for color mark mode.

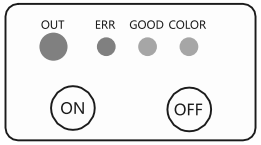

● Two-point teaching setting method

1. The light projected by the sensor flashes when the "ON" button and the "GOOD" green indicator light are pressed against the measured color;
2. Press the "OFF" button when the light projected by the sensor is facing the background color;
3. Successfully set: The "GOOD" green indicator light is constantly on, indicating that the detection can start normally; Setting failed: The "ERR" red indicator light flashes for 3 seconds before returning to the previous setting state. At this time, follow steps 1 and 2 to reset;
4. If you need to switch the NO (normally open) to NC (normally closed) output mode, you need to change the sequence of setting steps 1 and 2.

● Threshold hysteresis adjustment

1. Press the "ON" button for more than 5 seconds until the ERR、GOOD. COLOR indicators flash simultaneously.
2. Press the "OFF" button to adjust the return difference.

The relationship between hysteresis status and indicator flashing is as follows:

Status	Indicator ○ ○ ○	Three indicator lights flashing state
Hysteresis value small	○ ○ ●	Only COLOR indicator light flashing
Hysteresis value medium	○ ● ●	GOOD、COLOR Two indicators flashing at the same time
Hysteresis value large	● ● ●	ERR、GOOD、COLOR Three indicators flashing at the same time

● Exit from threshold hysteresis adjustment

In the case of threshold hysteresis adjustment, press the ON button for more than 5 seconds until the ERR、GOOD、COLOR three indicators stop flashing , that is exit from the threshold hysteresis adjustment.

When an error message appears, handle it as follows

Indicator Status	“ERR” The red indicator is always on and will not go out automatically
Error message content	The load on the output line is short-circuited and overcurrent flows
deal with	After turning off the power,check the load of output

Product specifications are subject to change without notice.
For more information or if you have any questions or suggestions about this product, please feel free to contact us.