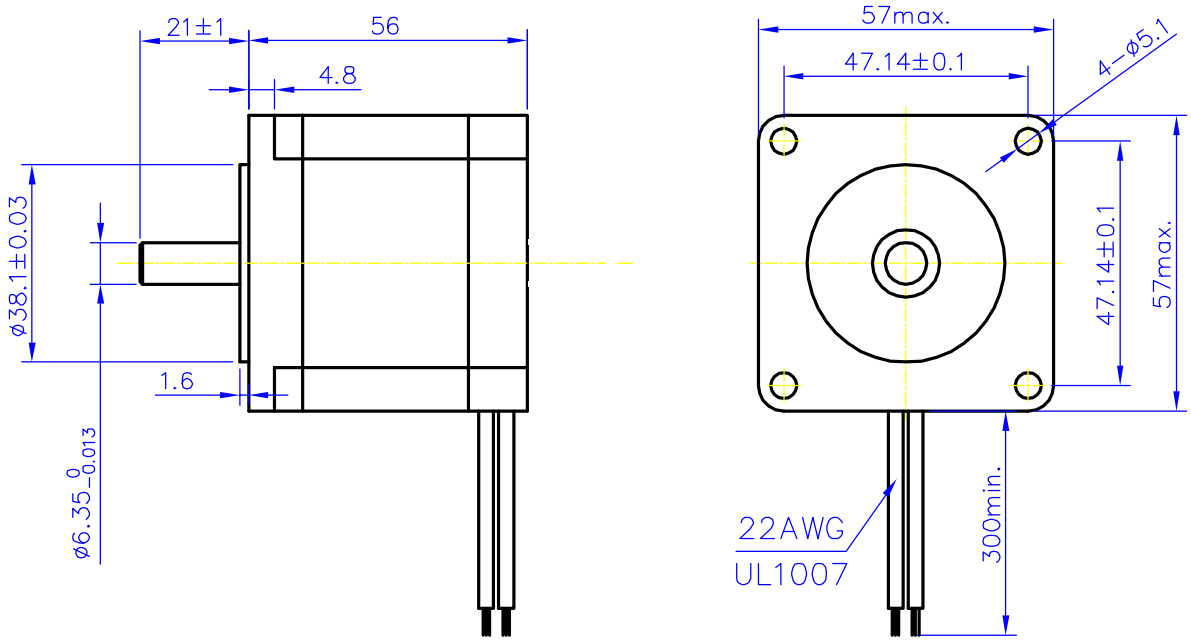

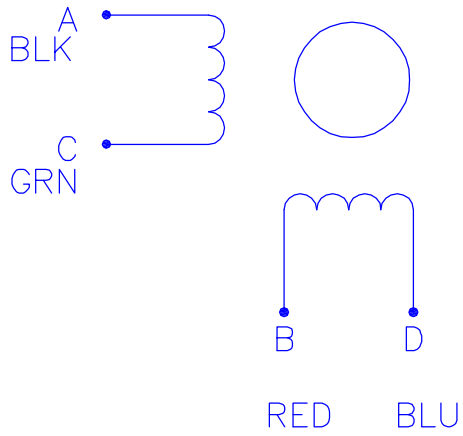

Phase	2		Comment
Step Angle	1.8	deg.	
Voltage	2.5	V	
Current	2.8	A	
Resistence	0.9	Ω	
Inductance	2.5	mH	
Holding Torque	12.6	kg.cm	
Insulation Class	B		
Mass	0.68	kg	

GD57STH56-2804A